PowerBalance RC315B/360B/362B/415B/461B/463B/464B/466B/468B

	Module			Dimensions in mm A	B	C	D	E	F	G	kg
RC360B	600	VPC CPC PCV	W60L60	597	597	524	524	67	86	10	6,0
			W30L120	1197	297	1172	135	77	95	10	5,0
RC362B	625	VPC CPC PCV	W62L62	622	622	524	524	67	86	10	6,0
			W31L125	1247	310	1172	135	77	95	10	6,0
RC461B	600	VPC CPC PCV	W60/L60	597	597	524	524	67	86	5	5,7
RC464B	600	VPC	W60/L60	597	597	524	524	67	86	5	5,7
			W30L120	1197	297	1047	264	67	79	5	5,3
RC463B	625	VPC CPC	W62/L62	622	622	524	524	67	86	5	5,9
RC468B	675	VPC	W67/L67	672	672	524	524	67	86	5	6,4
RC461B	600	VPC CPC PCV	W30L120	1197	297	1047	264	67	79	5	5,3
RC466B	625	VPC	W62L62	622	622	524	524	67	86	10	6,0
			W31L125	1247	310	1047	264	67	79	5	5,7
RC463B	625	VPC CPC	W31L125	1247	310	1047	264	67	79	5	5,7
RC415B	148 (s.m.*)	VPC	W15L120	1197	148	1172	135	77	95	5	4,8
RC415B	148 (s.m.*)	VPC	W15L125	1247	148	1172	135	77	95	5	5,1
RC315B	200 EXT.	BCV	W20L ext	1497-1850	200	1433	172	72	91	11	7,9
RC461B	600 EXT.	BCV	W30L ext	1495-1850	297	1360	278	74	92	11	10,7
RC463B	625 EXT.	BCV	W31L ext	1495-1850	310	1360	278	74	92	11	11,3

* Semi modular

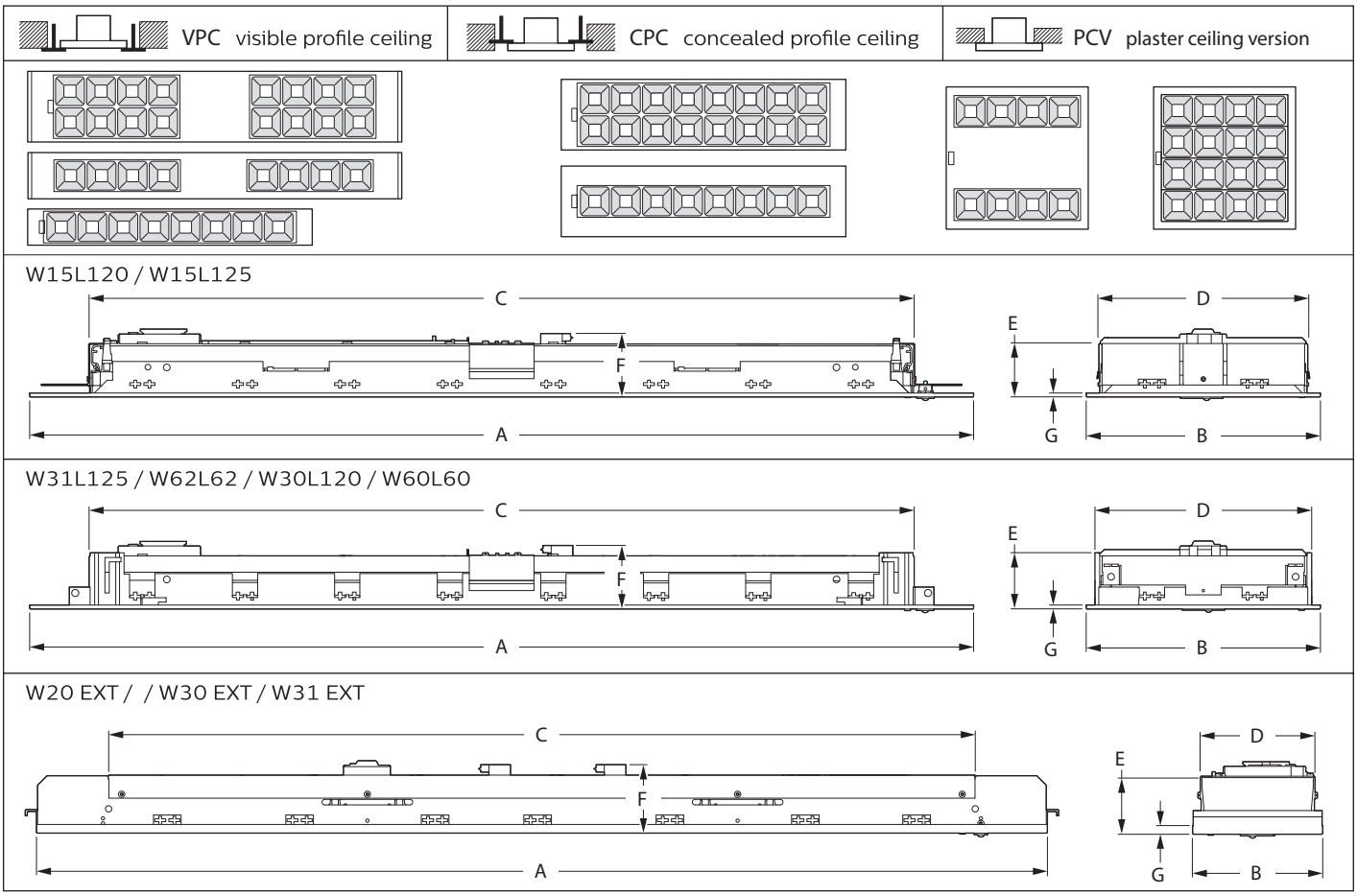

4422 004 27966
Printed in Hungary
Data subject to change without notice
© 12 / 2018, Signify Holding, All rights reserved
Keep for future reference: www.philips.com/lighting

PHILIPS

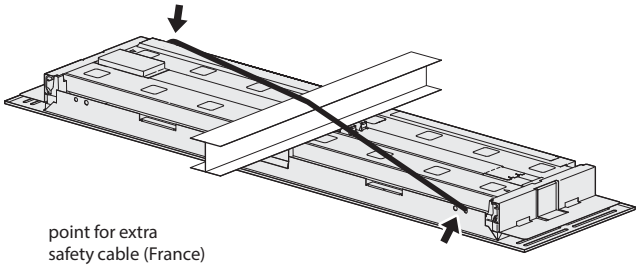

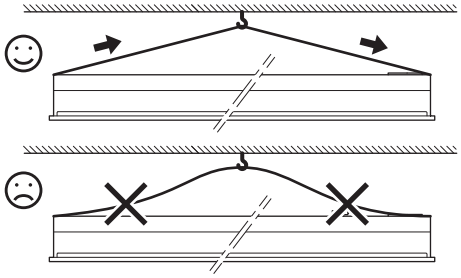

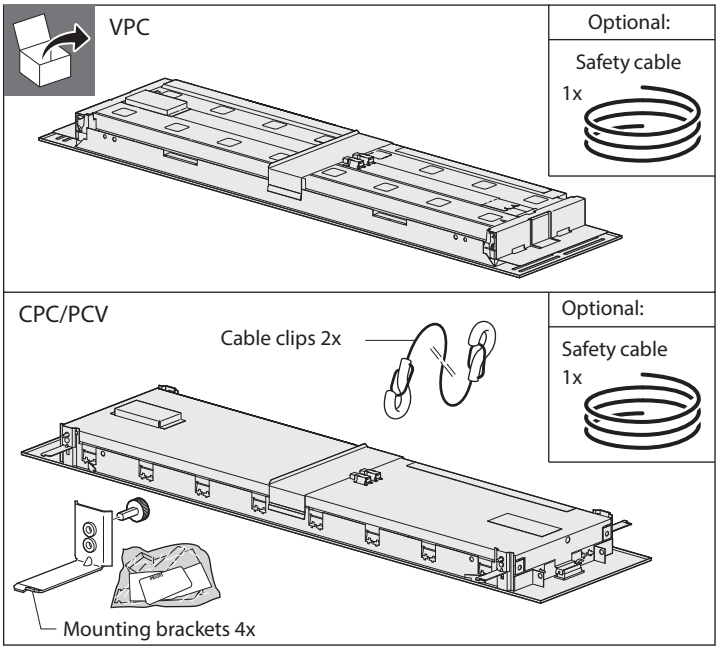

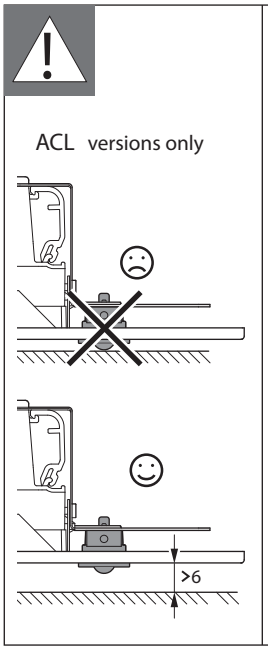

	HV Xitanium		TWH driver
	36W	75W	100W
	Electrical characteristics		
Imax.(A)	21	5	49
Tref(µs)	255	1000	154
EL I max	0,7	0,7	0,7
	Luminaires Max.		
MCB (16A-B)	20	20	17
EL CB 30 mA	30	30	30

(EL =Earth leakage)

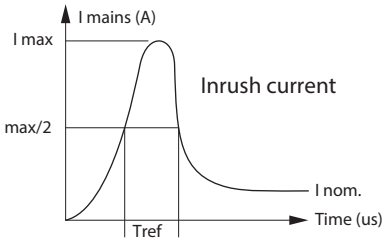

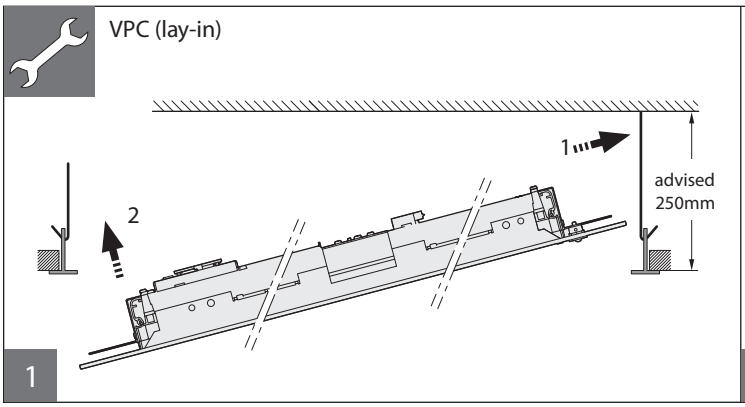

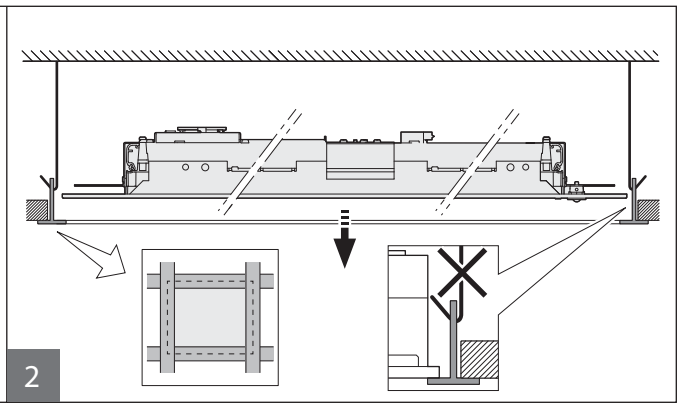

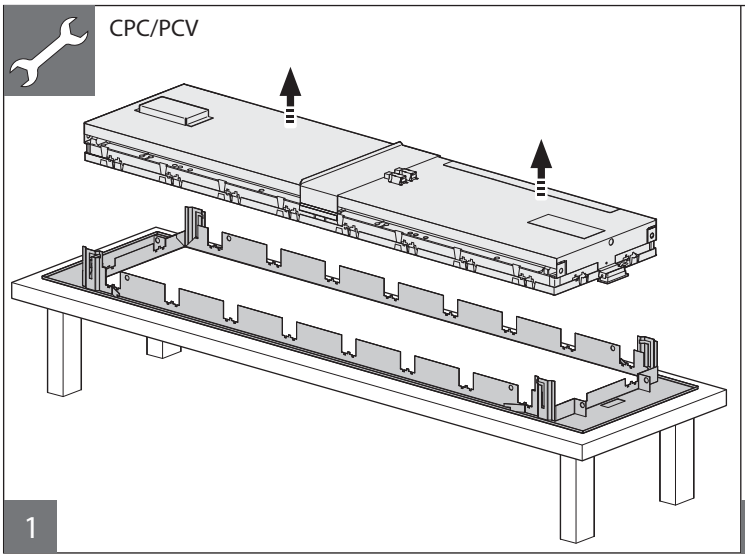

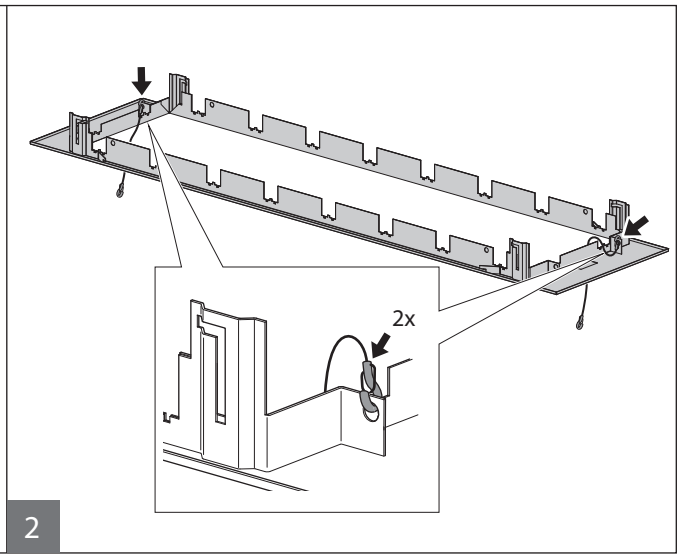

sym-concealed

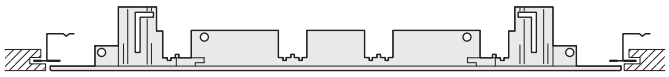

Rect. ✓ ☺

Square ✓ ☺

A-sym-concealed

Rect. ✗ ☹

Square ✓ ☺

Click-in Profile

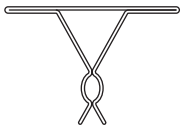

Rect. ✗ ☹

Square ✓ ☺

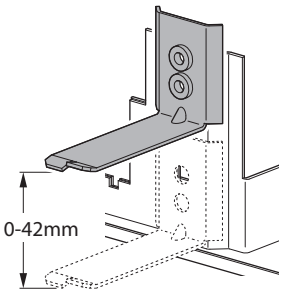

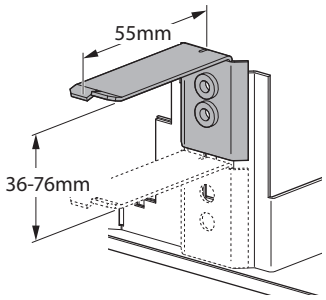

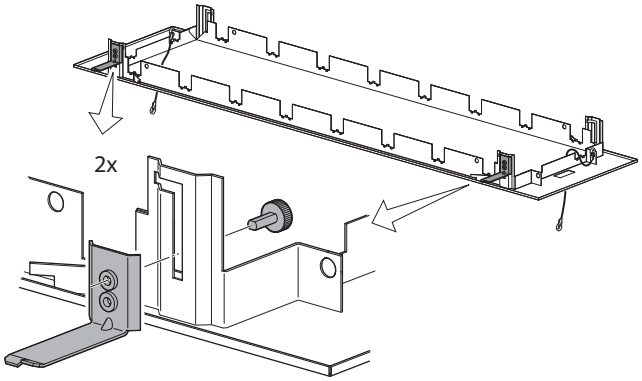

3

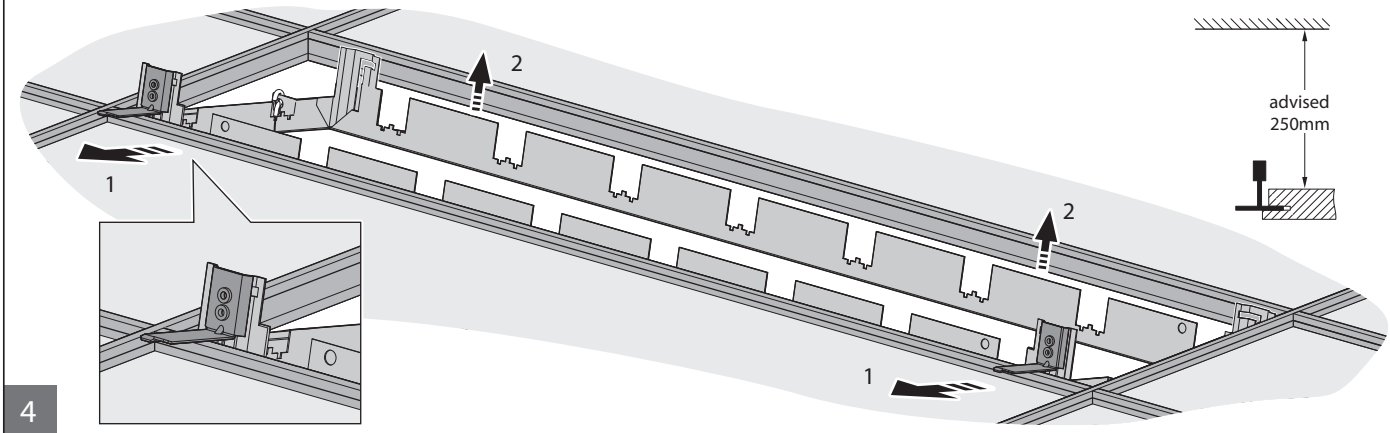

4

CPC

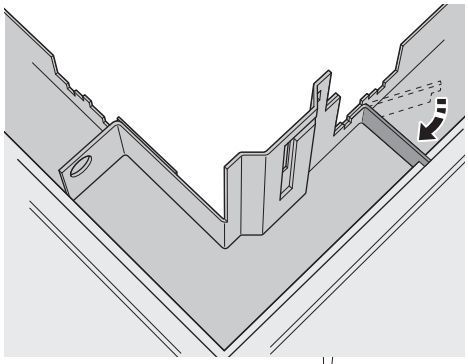

5a

PCV

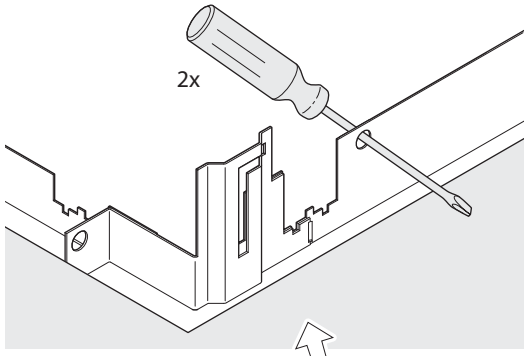

5b

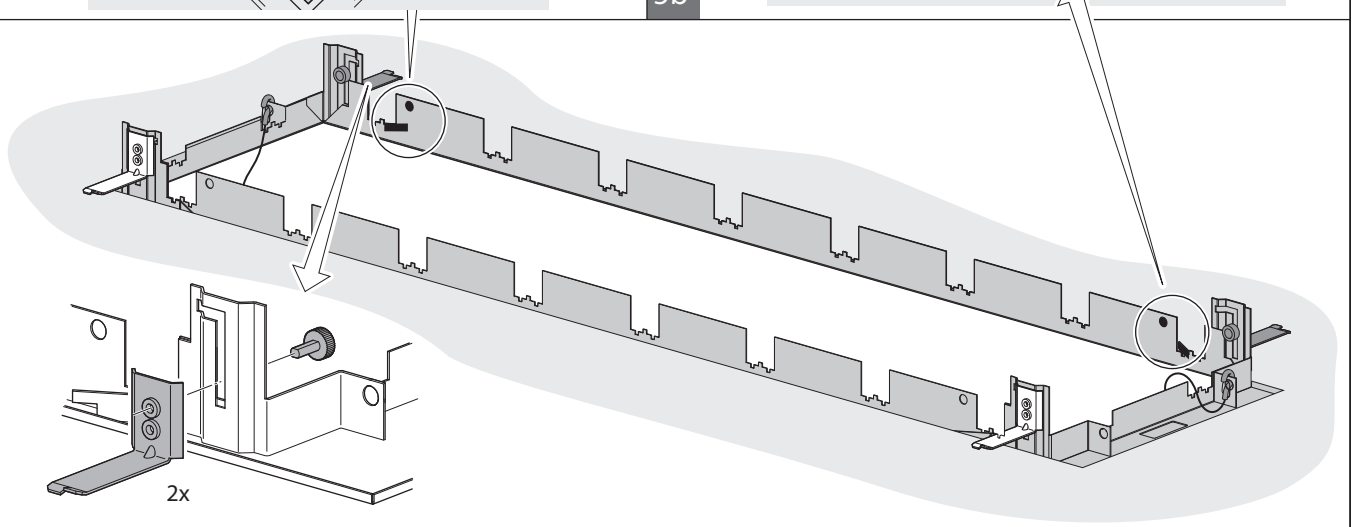

6

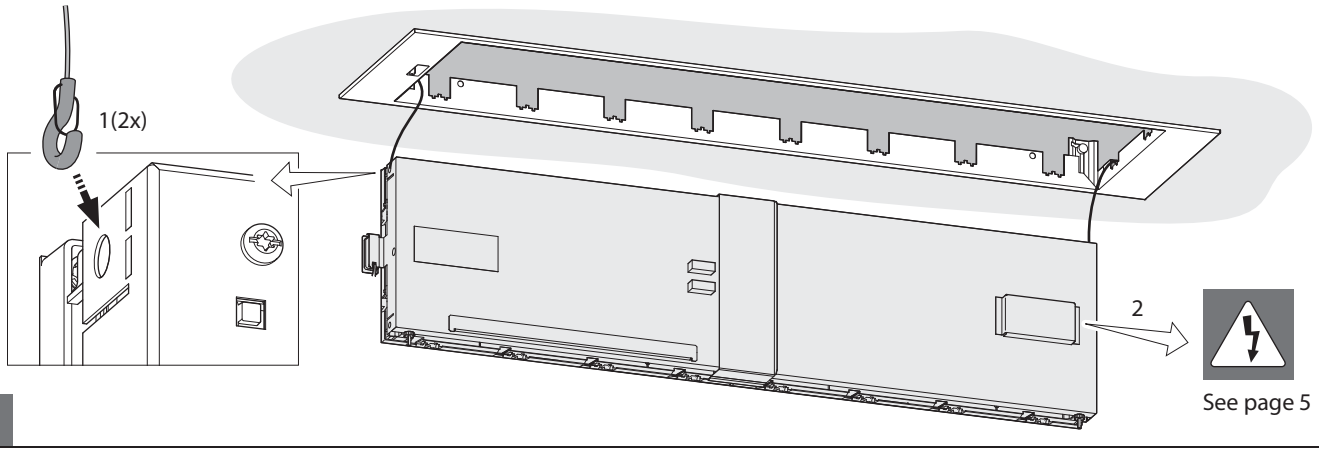

See page 5

7a

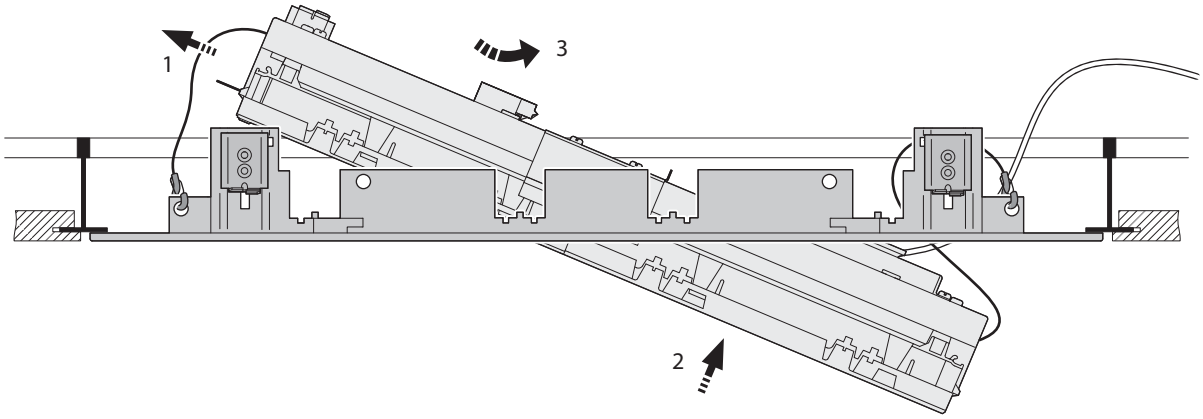

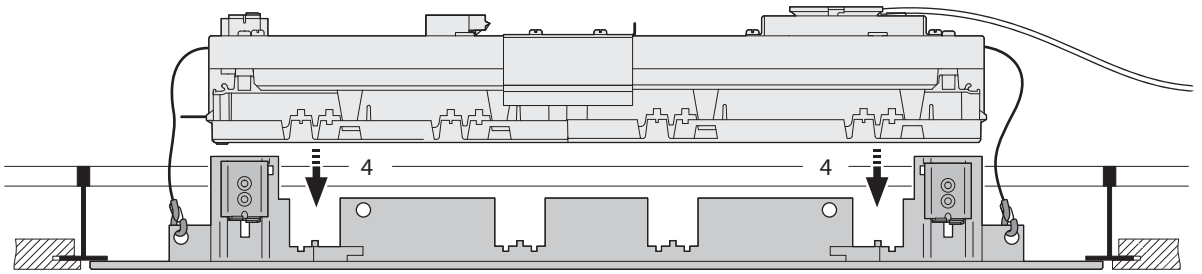

7b

PCV rect. concealed

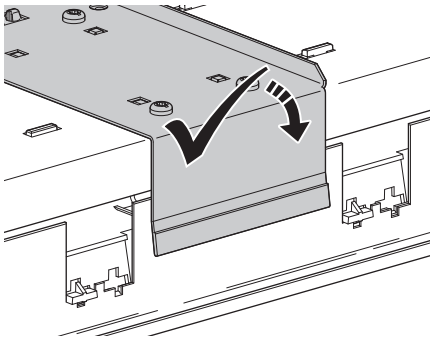

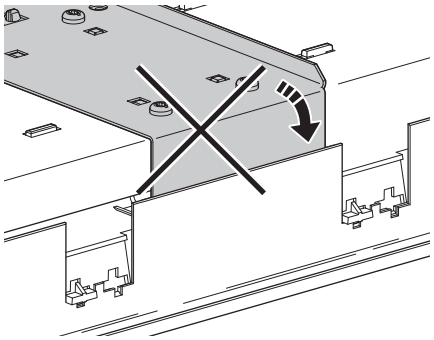

PCV

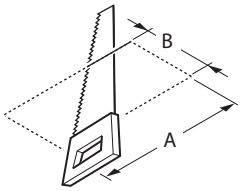

Module		A(mm)	B(mm)
RC461B 600	W30L120	1105	282
RC461B 600	W60L60	582	582

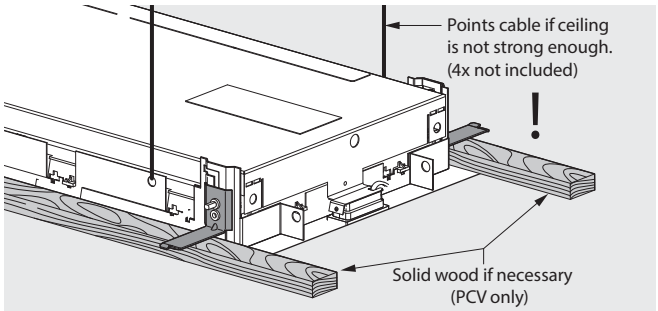

See step: 1-7 of CPC/PCV

Push-in (PIP)

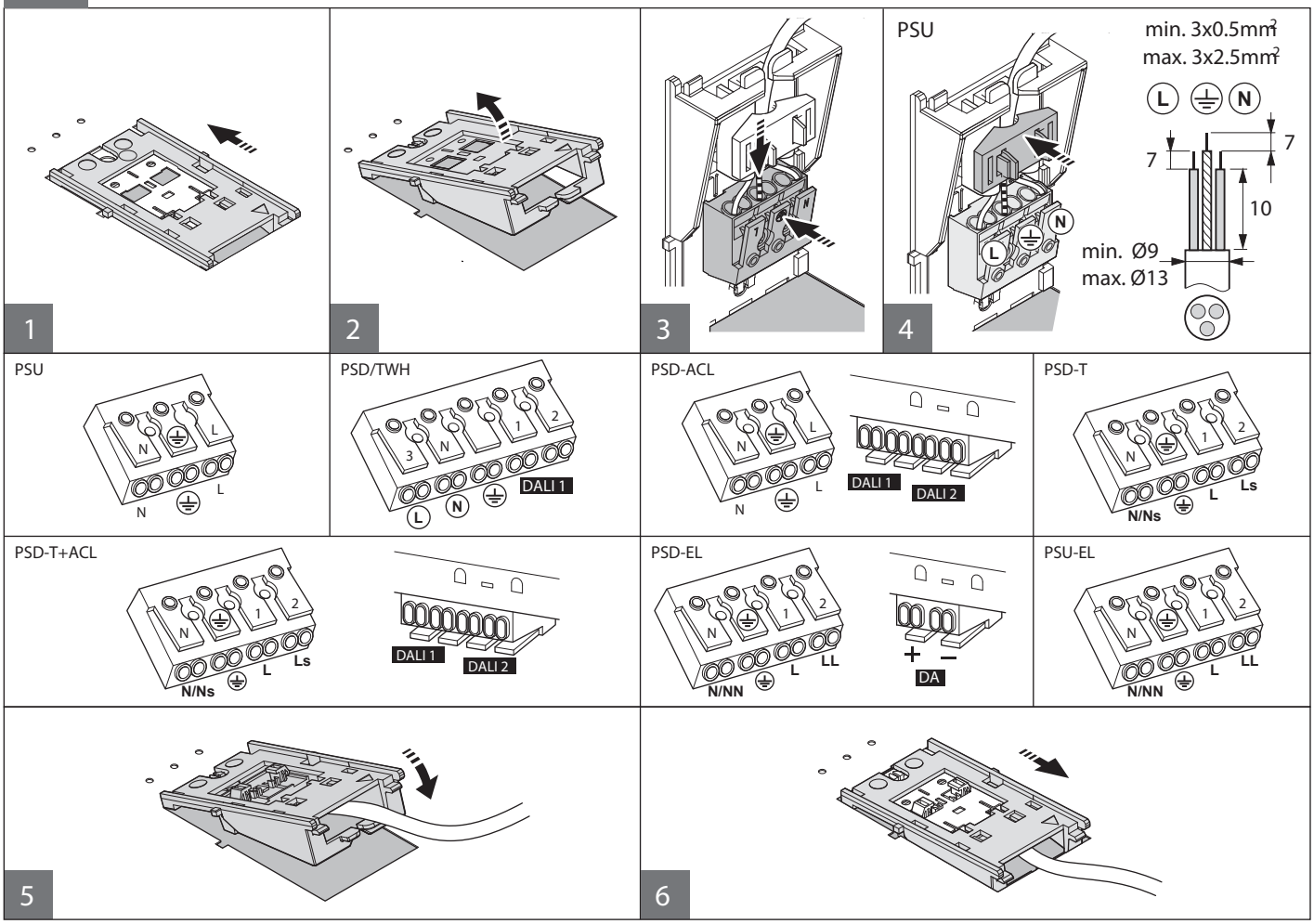

Wieland (W)

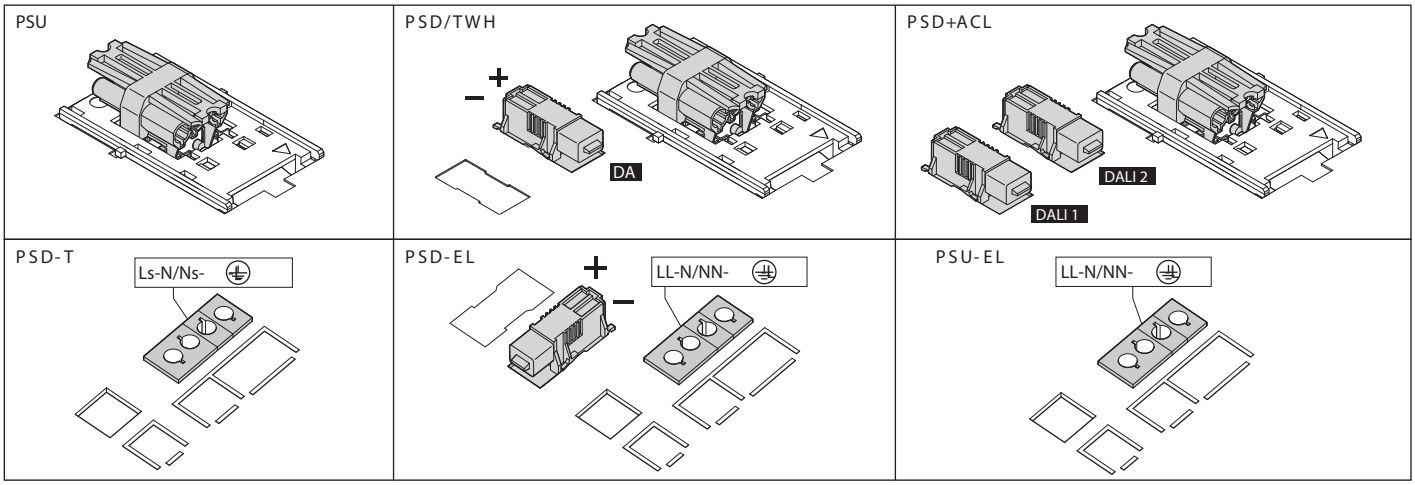

POE

Condition Philips to specify to the customers (instruction):
> to use UTP (Unshielded Twisted Pair) CAT5E or CAT6 cable
> the maximum length of the cable to be 20 meters.
Apply a minimum radius of the Ethernet cable of 4x the cable diameter.

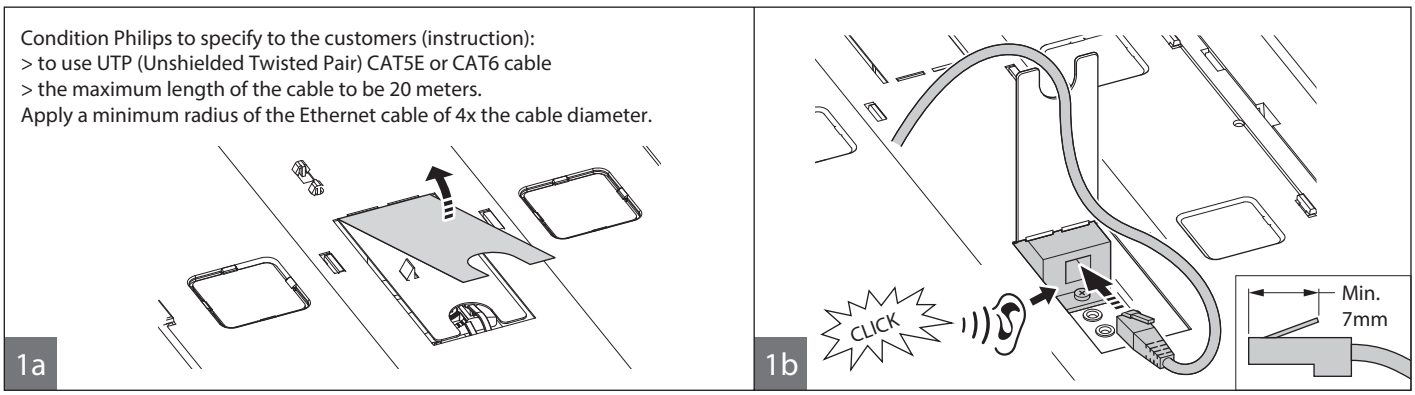

Replace driver

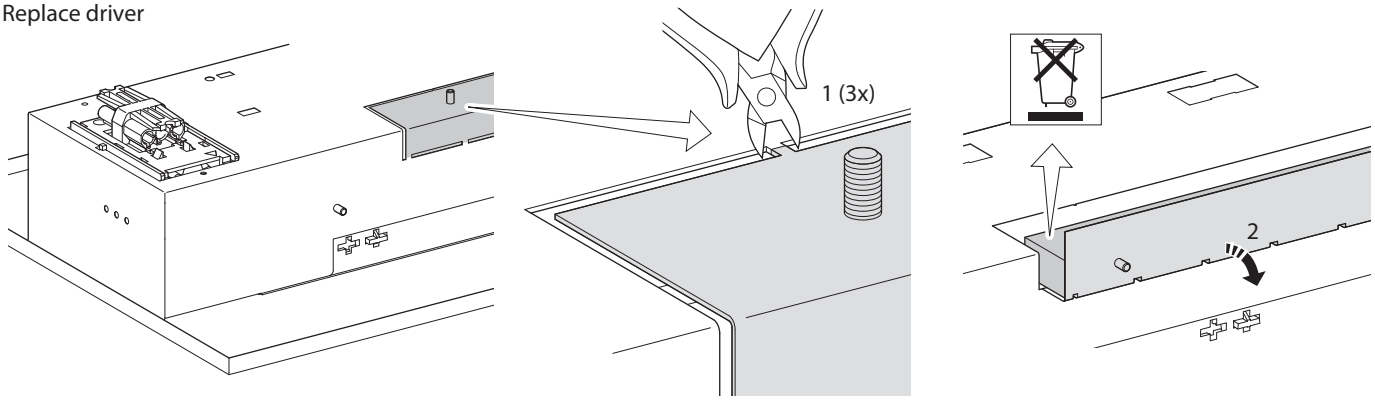

For use in ventilated space (EN/IEC 60598-2-19)

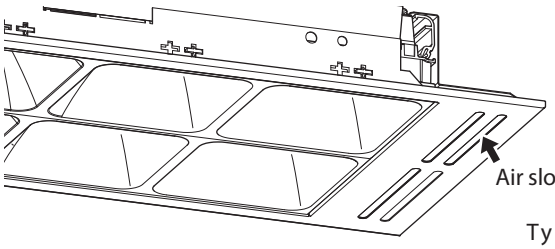

Type "AIR"

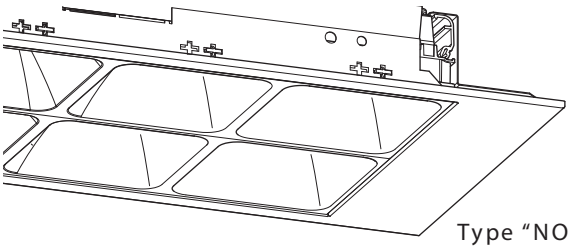

Type "NON AIR"

- The luminaire shall be installed by a qualified electrician and wired in accordance with the latest IEE electrical regulations or the national requirements.
- Please do not remove the protect film before installing to avoid scraping or dirtying the optical part.
- Indoor use only.
- During installation or maintaining the luminaire please use gloves to avoid spots on the cover.
  To remove dirt and spots use the following: – Dust: use micro fiber cloths only
  - Fingerprints, etc.: use a cleaner for synthetic materials with antistatic properties.

"This includes the general mounting instructions incl. notes and legend icons. You can find it on www.philips.com/lighting"