PHILIPS CityCharm BDS490i

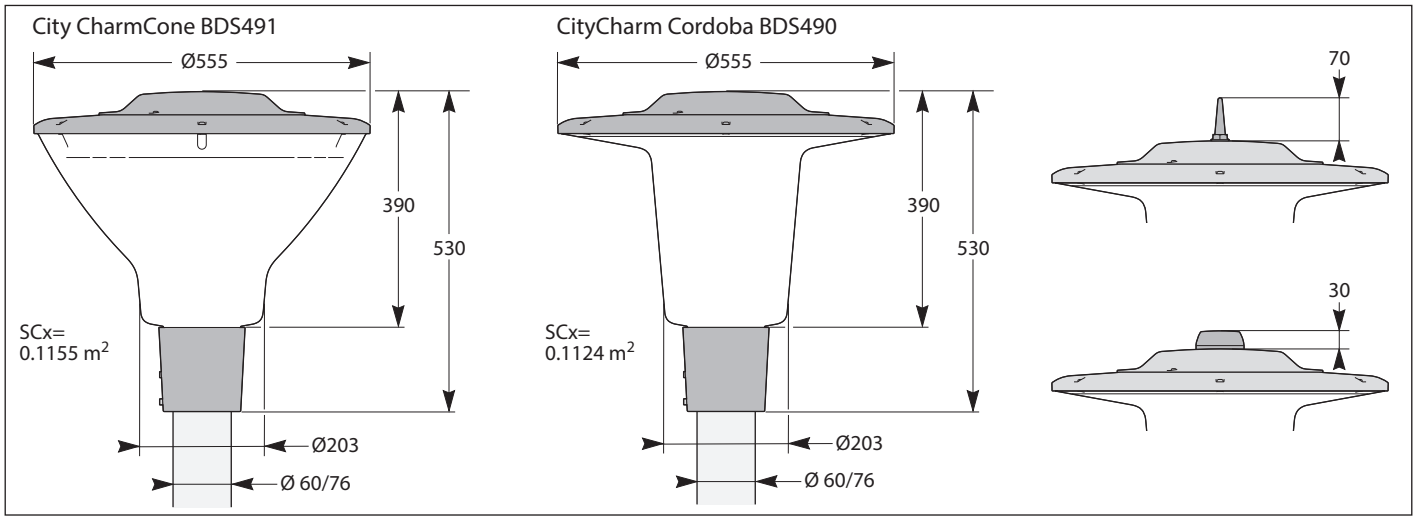

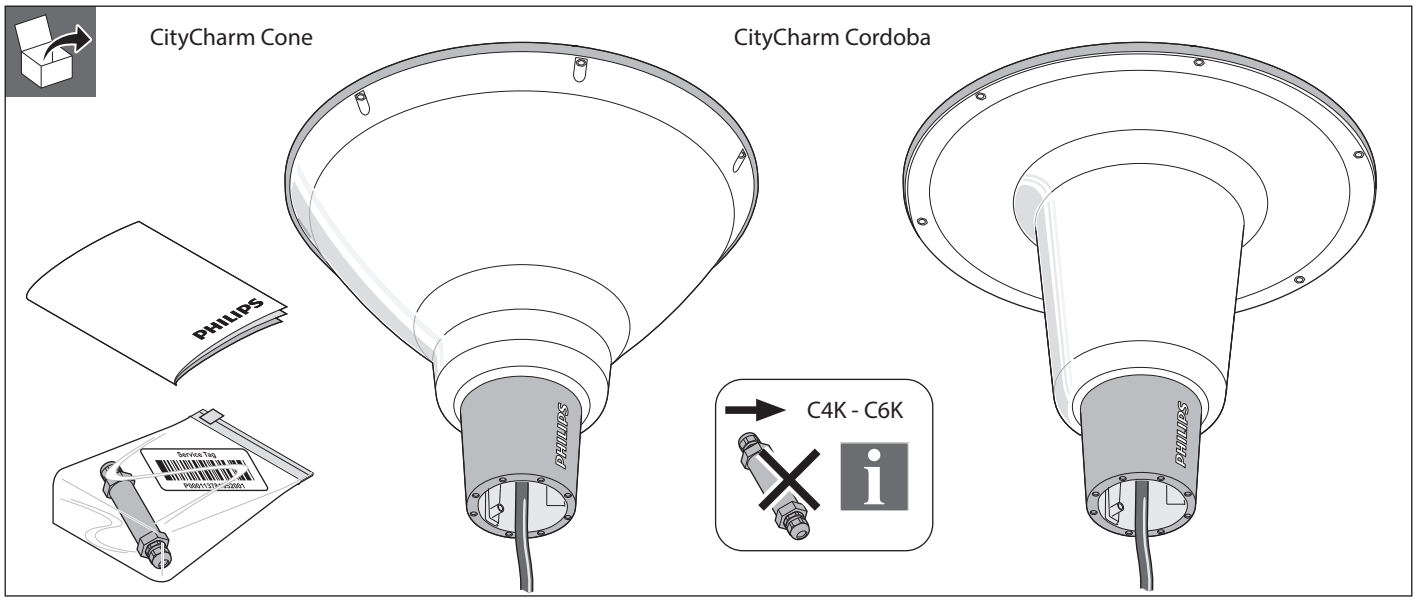

4411 102 68474
Printed in France
Data subject to change without notice
© 09/2016,Koninklijke Philips Electronics N.V. All rights reserved
keep for future reference: www.philips.com/lighting

PHILIPS

City Charm BDS490 / BDS491
+ post top bracket JDP490

City Charm BDS490 / BDS491
+ dedicated pole YHM490

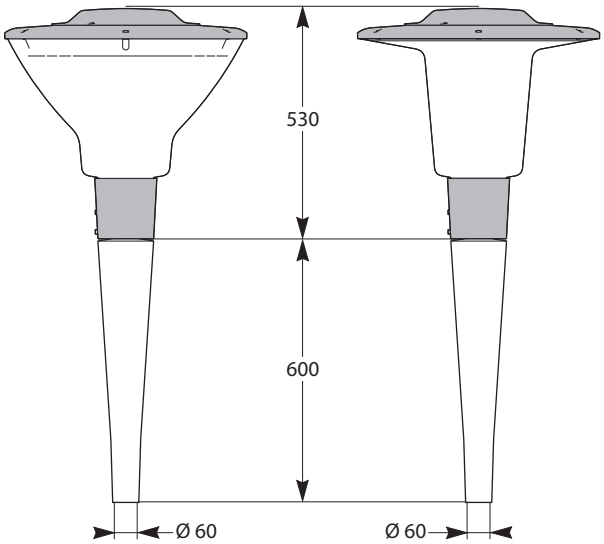

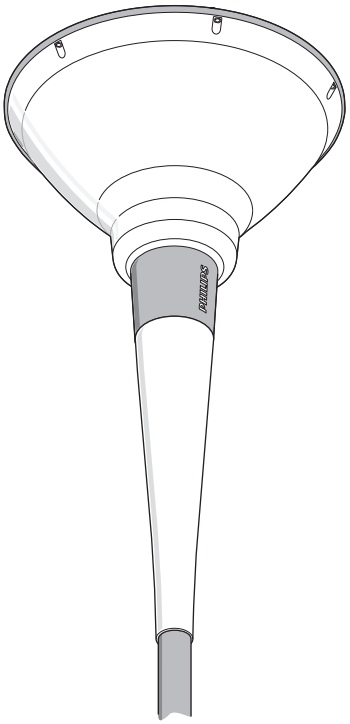

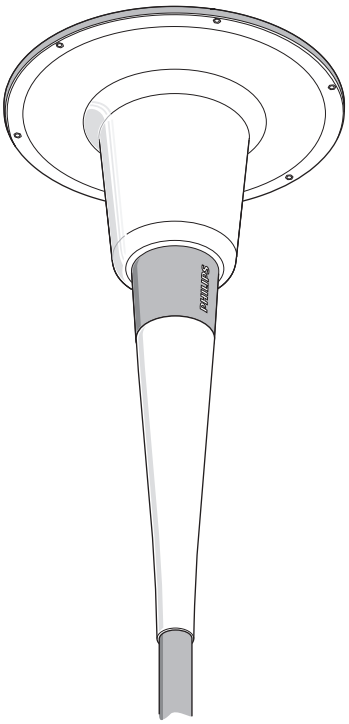

City Charm BDS490 / BDS491 C4K - C6K
+ single arm bracket JPP490

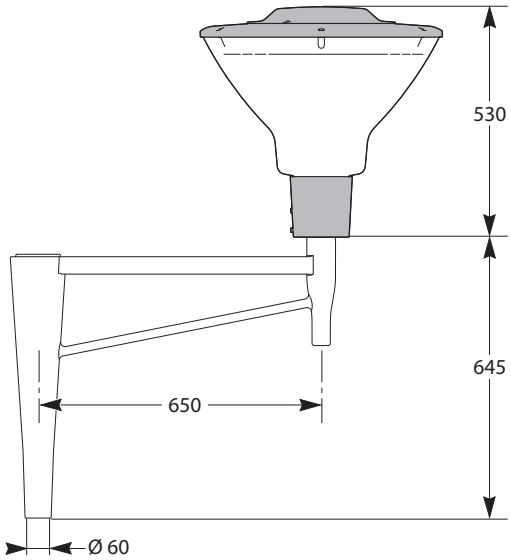

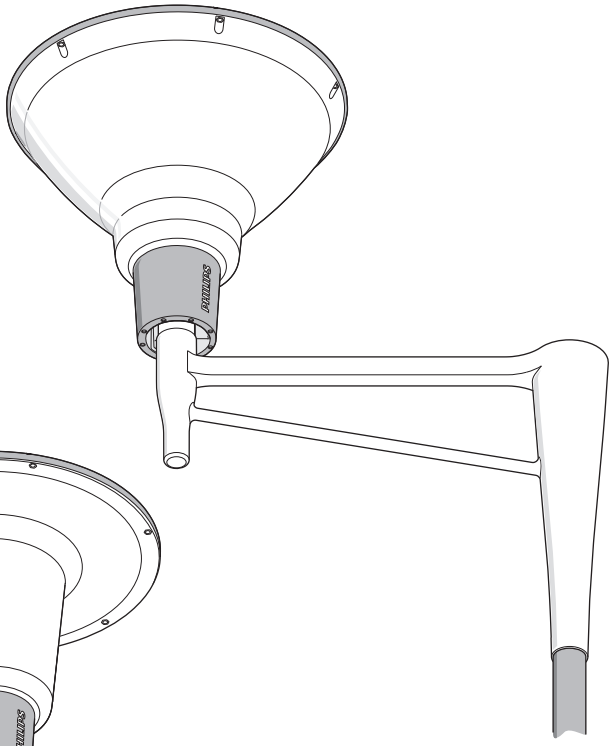

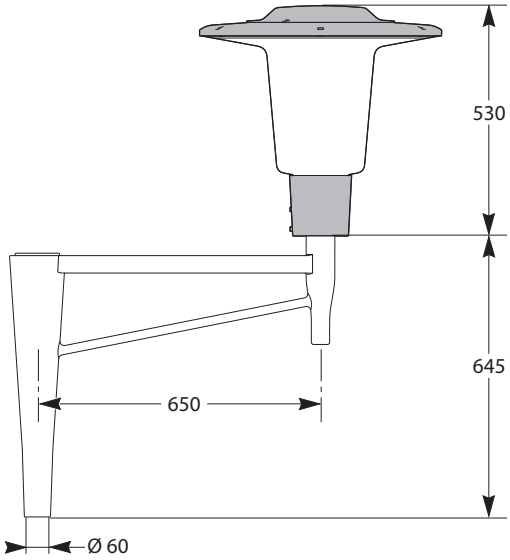

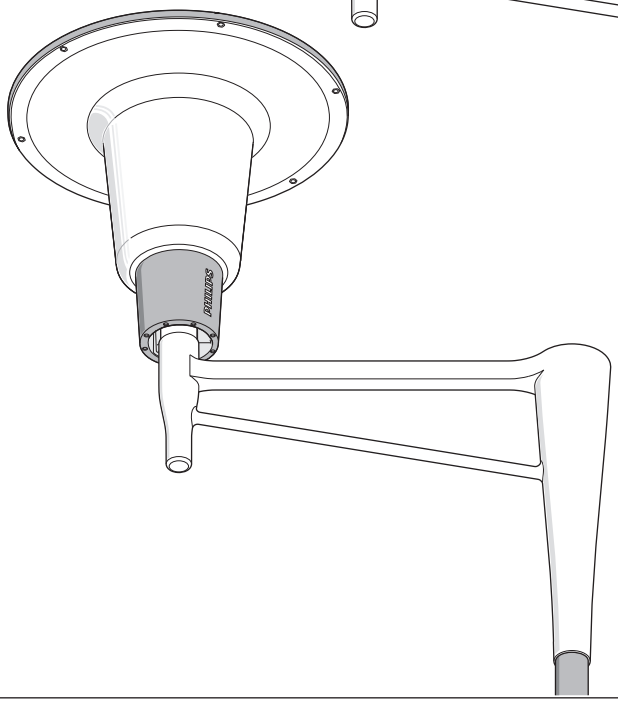

led color	ledgine	LEDs	W +/-10%	lumen	Max.*	kg			TA 35°	TA 50°
740	GRN10	8	9	1100	32	11	✓	✓	✓	✓
740	GRN15	8	13	1500	32	11	✓	✓	✓	✓
740	GRN20	8	17	2000	32	11	✓	✓	✓	✓
740	GRN25	8	22	2500	32	11	✓	✓	✓	✓
740	GRN30	20	22	3000	32	11	✓	✓	✓	✓
740	GRN40	20	31	4000	32	11	✓	✓	✓	✓
740	GRN50	20	39	5000	32	11	✓	✓	✓	
740	GRN60	40	42	6000	11	11.3	✓	✓	✓	✓
740	GRN70	40	51	7000	11	11.3	✓	✓	✓	✓
740	GRN80	40	59	8000	11	11.3	✓	✓	✓	✓
740	GRN90	40	67	9000	11	11.3	✓	✓	✓	✓
740	GRN100	40	75	10000	11	11.3	✓	✓	✓	✓
830	GRN10	8	10	1100	32	11	✓	✓	✓	✓
830	GRN15	8	13	1500	32	11	✓	✓	✓	✓
830	GRN20	8	18	2000	32	11	✓	✓	✓	✓
830	GRN25	8	24	2500	32	11	✓	✓	✓	✓
830	GRN30	20	25	3000	32	11	✓	✓	✓	✓
830	GRN40	20	34	4000	32	11	✓	✓	✓	✓
830	GRN50	20	43	5000	32	11	✓	✓	✓	
830	GRN60	40	47	6000	11	11.3	✓	✓	✓	✓
830	GRN70	40	56	7000	11	11.3	✓	✓	✓	✓
830	GRN80	40	64	8000	11	11.3	✓	✓	✓	✓
830	GRN90	40	74	9000	11	11.3	✓	✓	✓	✓
830	GRN100	40	82	10000	11	11.3	✓	✓	✓	✓

led color	ledgine	LEDs	W +/-10%	lumen	Max.*	kg			TA 35°
740	CG20	15	16	2000	32	11	✓	✓	✓
740	CG25	15	19	2500	32	11	✓	✓	✓
740	CG30	15	23	3000	32	11	✓	✓	✓
740	CG35	15	28	3500	32	11	✓	✓	✓
740	CG40	15	32	4000	32	11	✓	✓	✓
730	CG20	15	18	2000	32	11	✓	✓	✓
730	CG25	15	23	2500	32	11	✓	✓	✓
730	CG30	15	28	3000	32	11	✓	✓	✓
730	CG35	15	33	3500	32	11	✓	✓	✓

*Maxi number of luminaire on MCB 16A type B

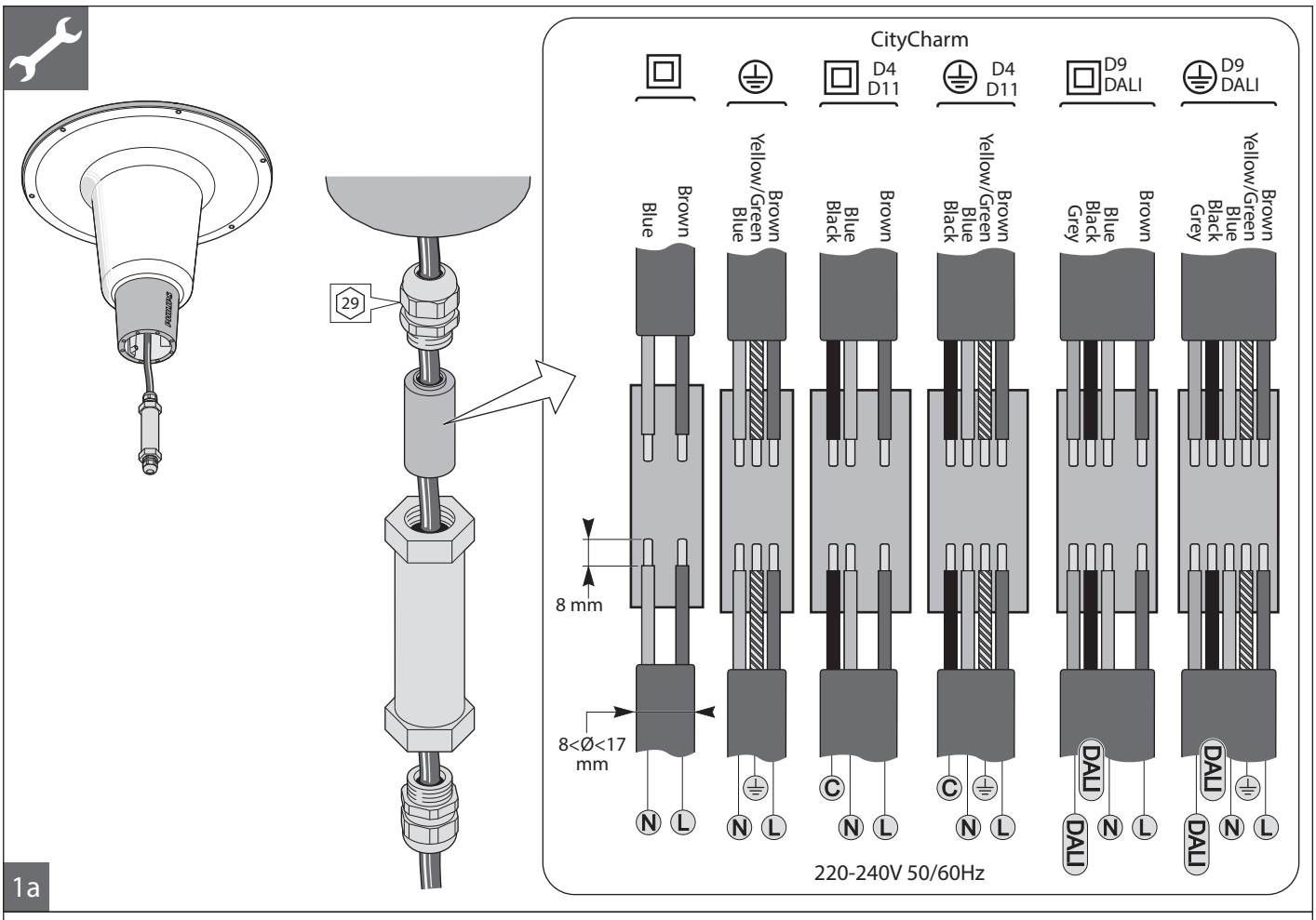
CityCharm
D4 D11
D4 D11
D9 DALI
D9 DALI
Brown
Blue
Brown
Yellow/Green
Blue
Brown
Blue
Black
Brown
Yellow/Green
Blue
Black
Brown
Blue
Black
Grey
Brown
Yellow/Green
Blue
Black
Grey
29
8 mm
8<Ø<17 mm
N
L
C
DALI
220-240V 50/60Hz

1a

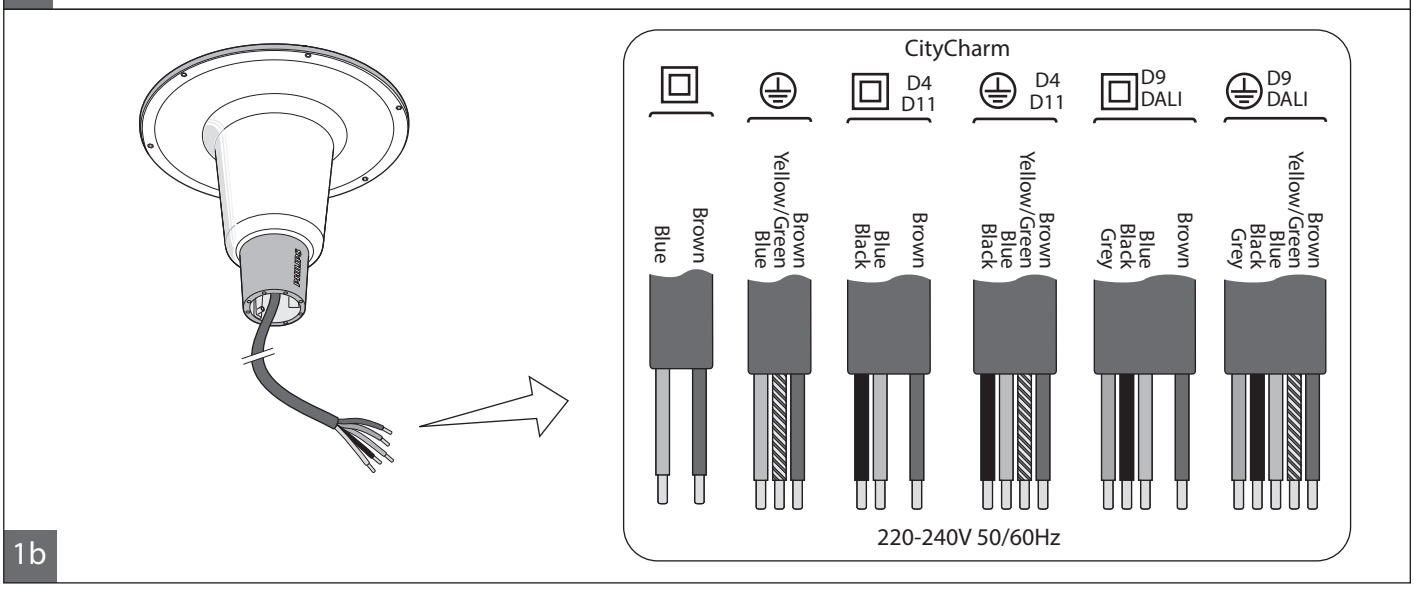
CityCharm
D4 D11
D4 D11
D9 DALI
D9 DALI
Brown
Blue
Brown
Yellow/Green
Blue
Brown
Blue
Black
Brown
Yellow/Green
Blue
Black
Brown
Blue
Black
Grey
Brown
Yellow/Green
Blue
Black
Grey
220-240V 50/60Hz

1b

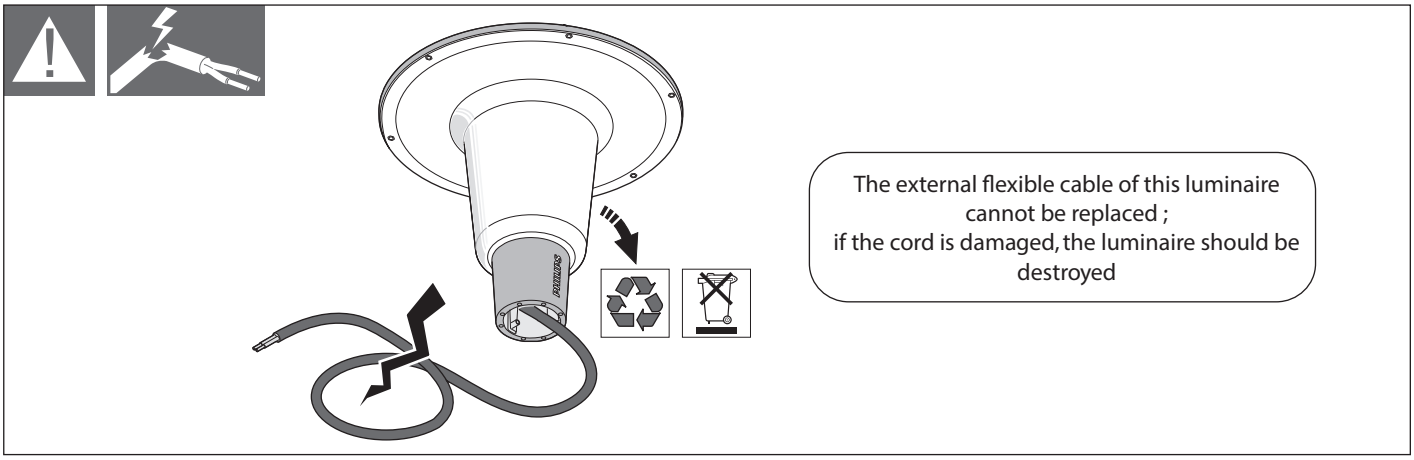
The external flexible cable of this luminaire cannot be replaced ;
if the cord is damaged, the luminaire should be destroyed

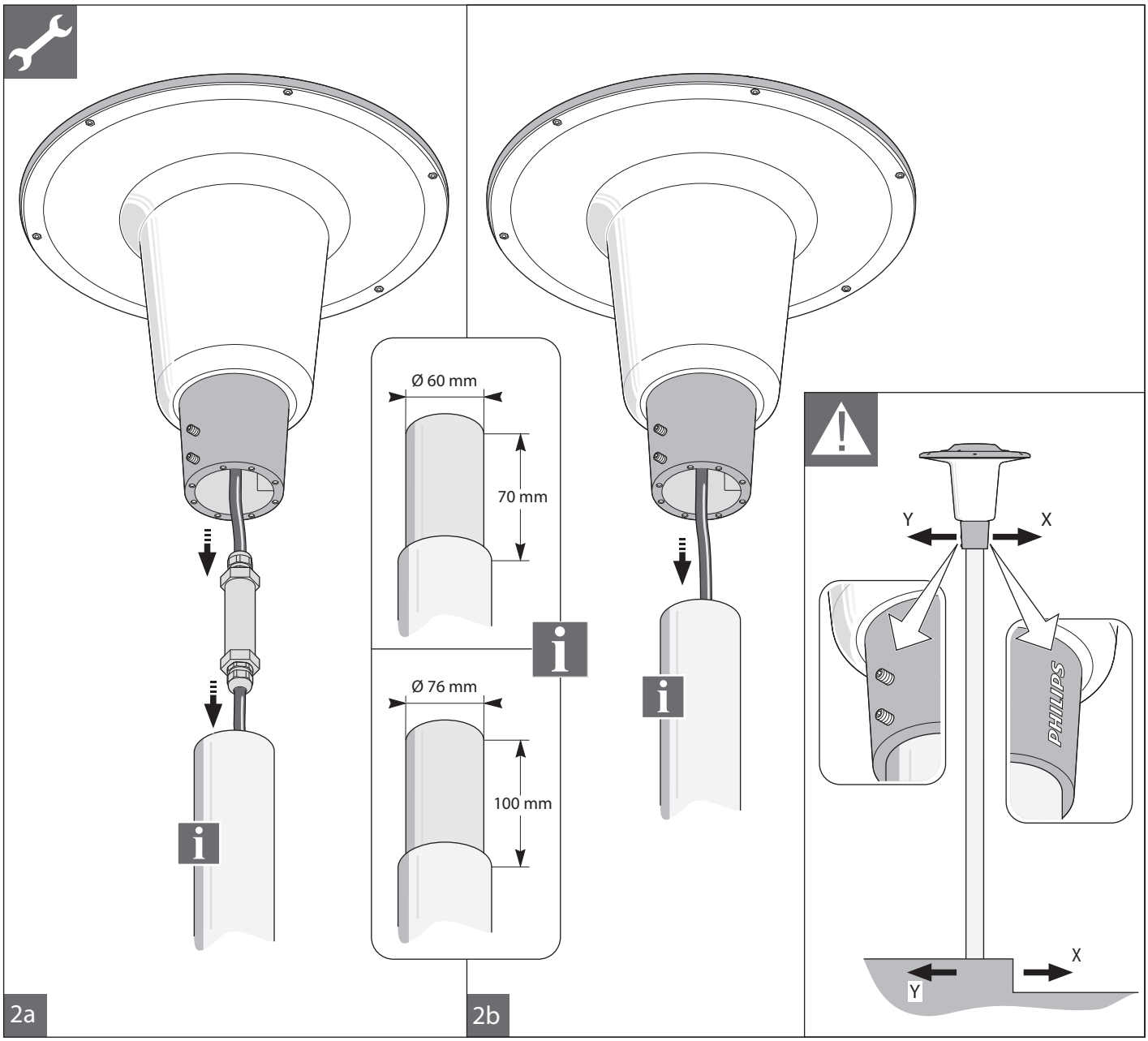
Ø 60 mm
70 mm
Ø 76 mm
100 mm
Y
X
PHILIPS
2a
2b

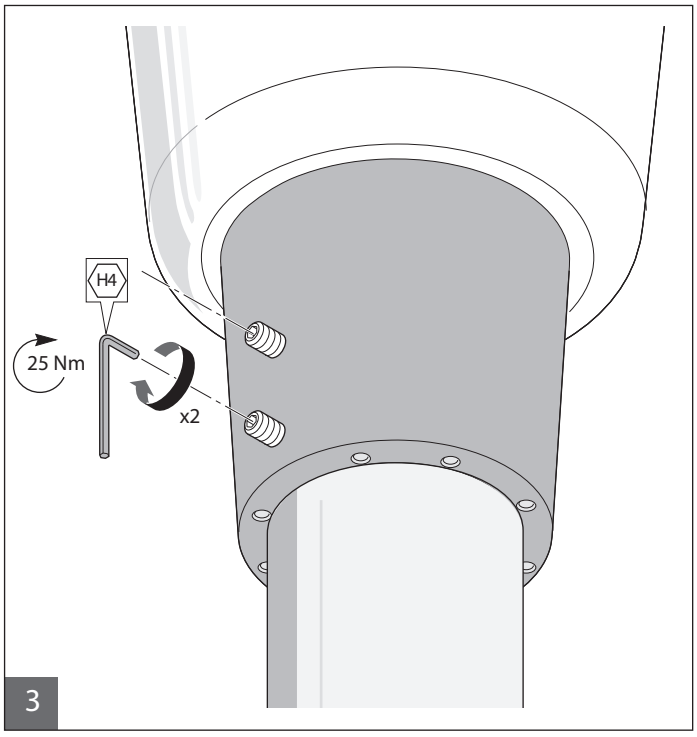
H4
25 Nm
x2
3

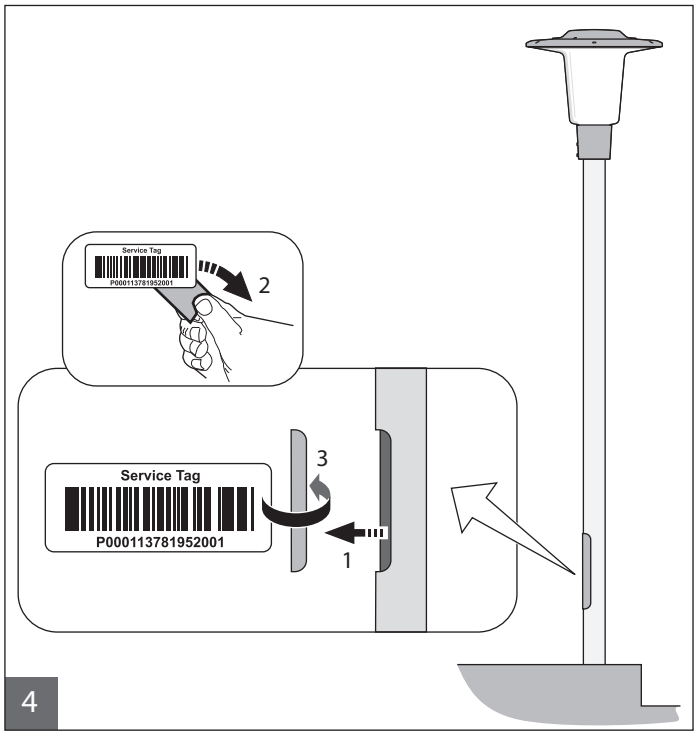
Service Tag
P000113781952001
2
3
1
4

LUMISTEP

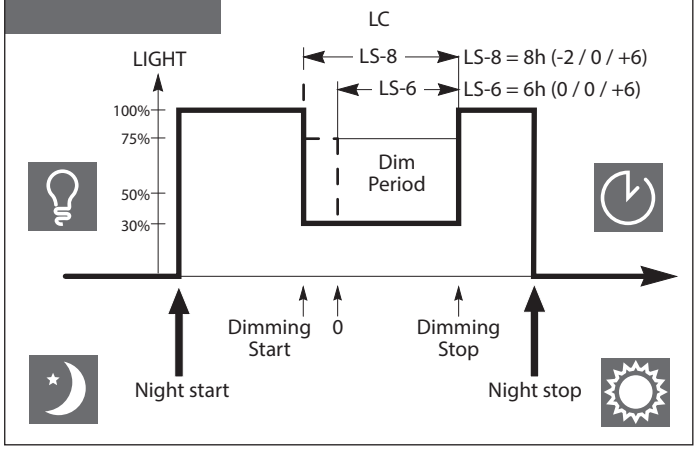

DYNADIMMER

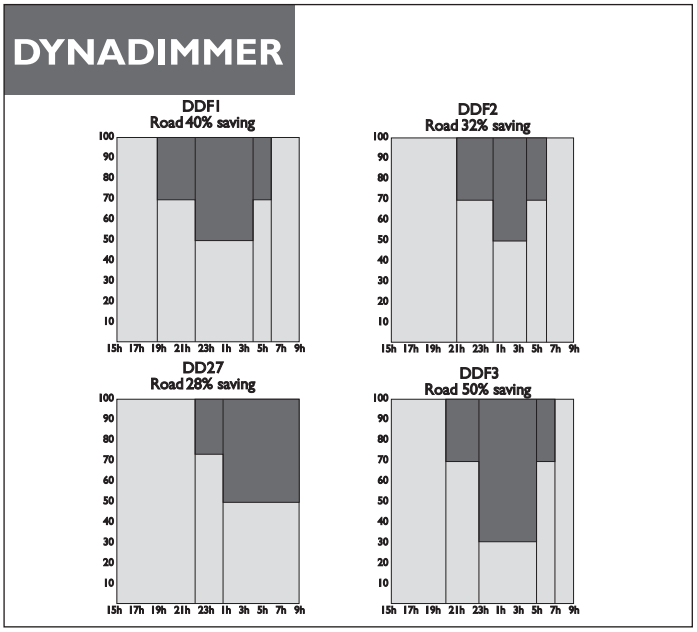

LWx

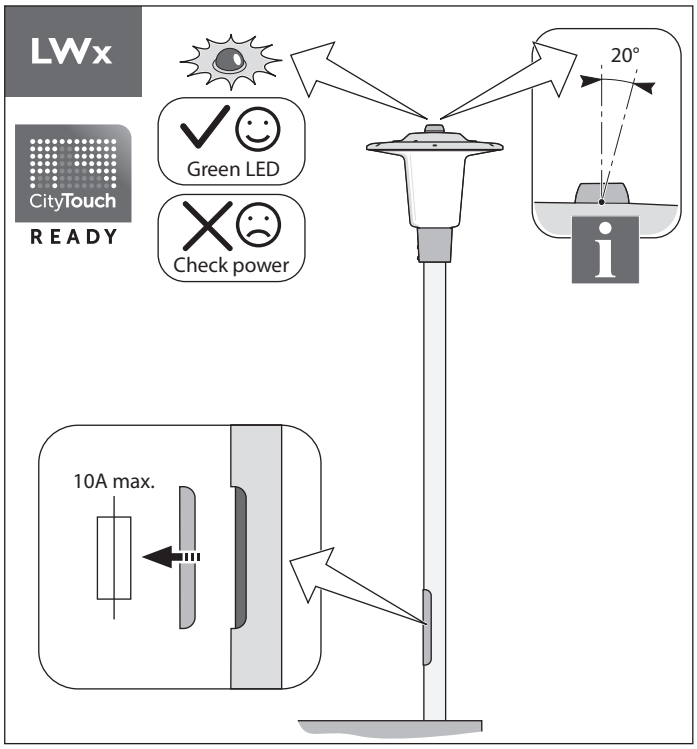

SRG10

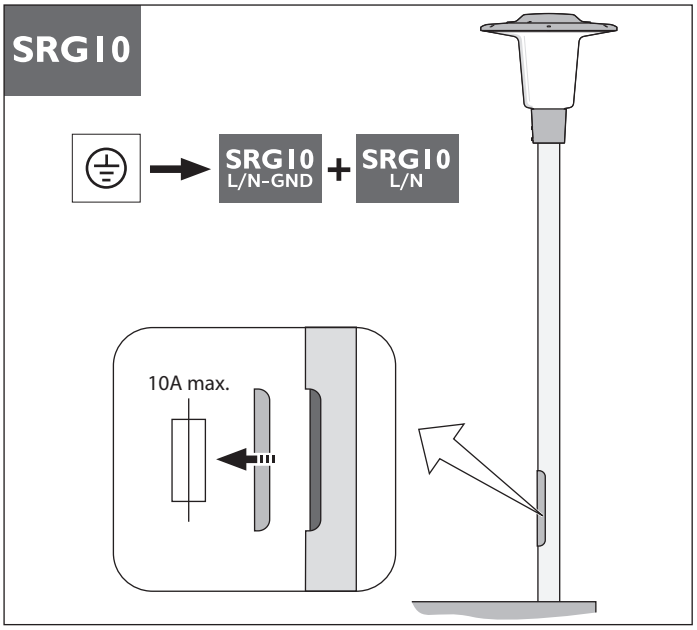

RF

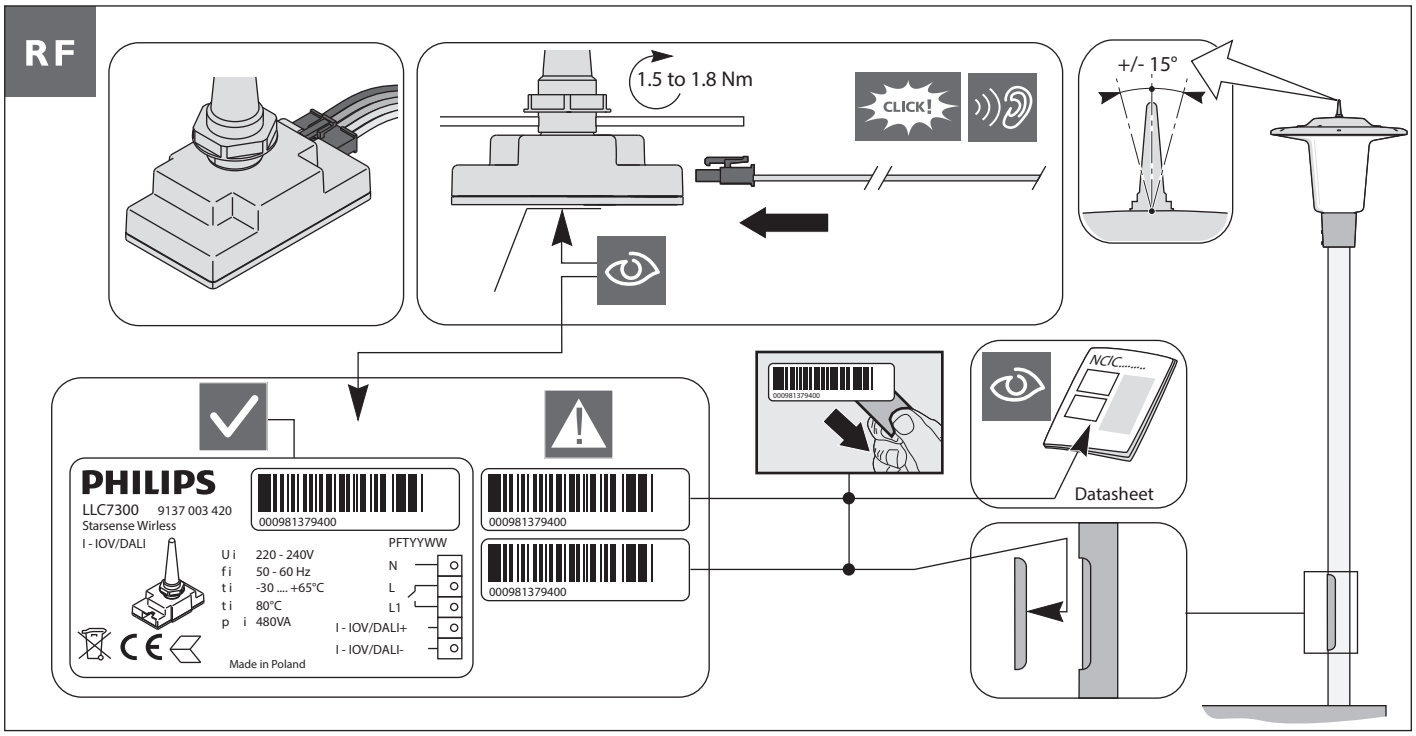

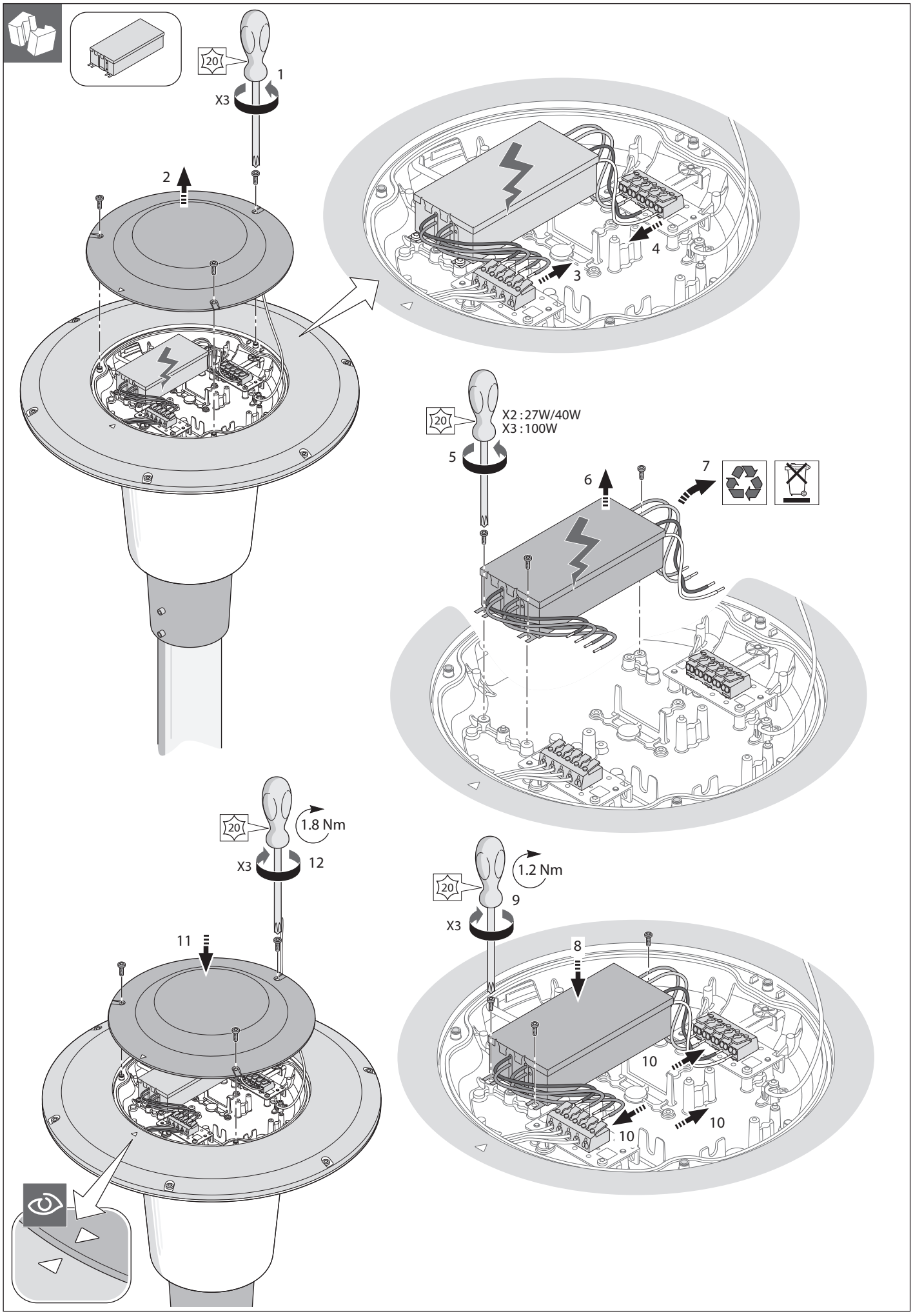
20
1
X3
2
3
4
20
X2 : 27W/40W
X3 : 100W
5
6
7
20
1.8 Nm
X3
12
11
20
1.2 Nm
9
X3
8
10
10
10

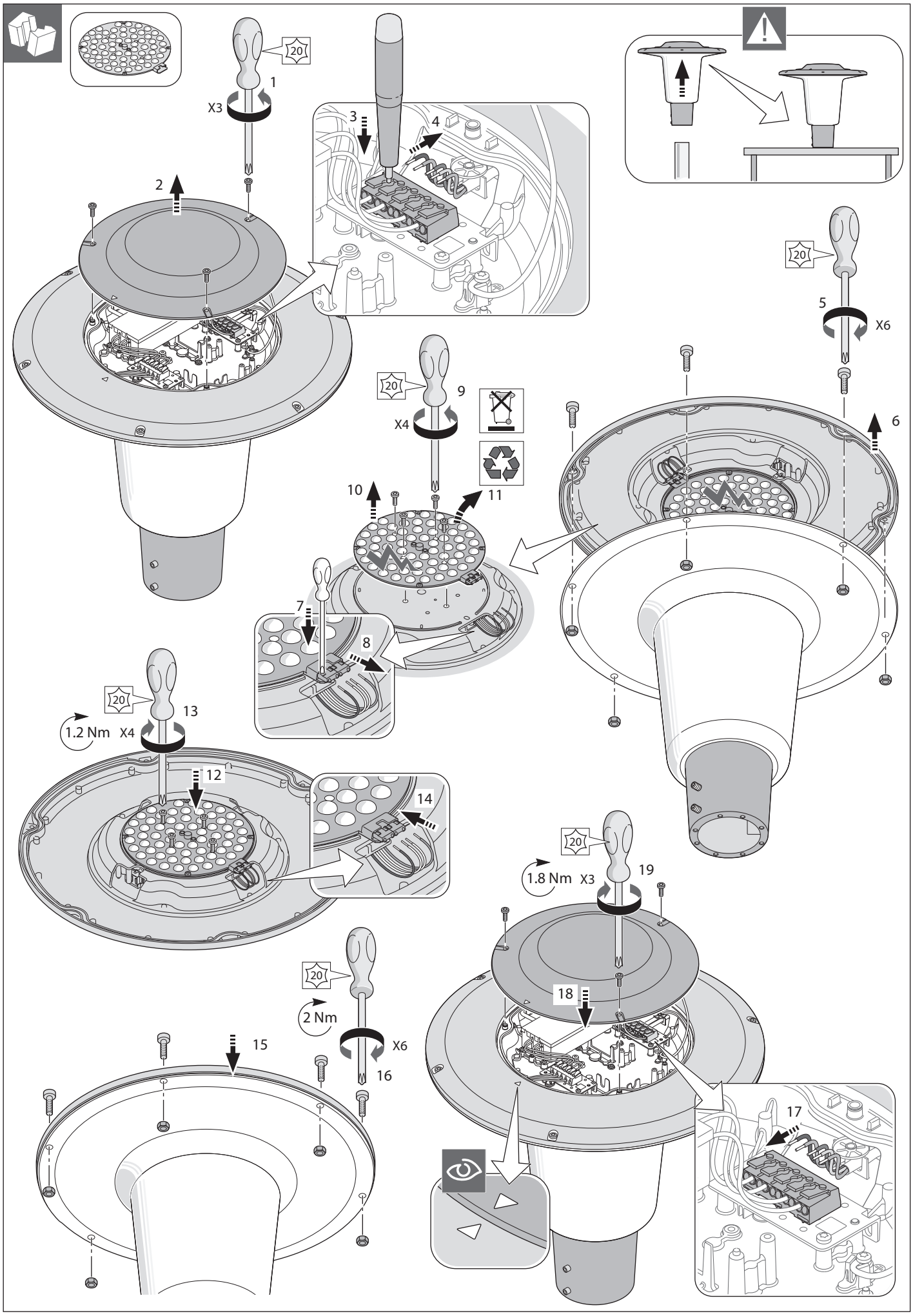
20
1
X3
2
3
4
20
5
X6
6
20
9
X4
10
11
7
8
20
13
1.2 Nm X4
12
14
20
1.8 Nm X3
19
18
17
20
2 Nm
X6
16
15

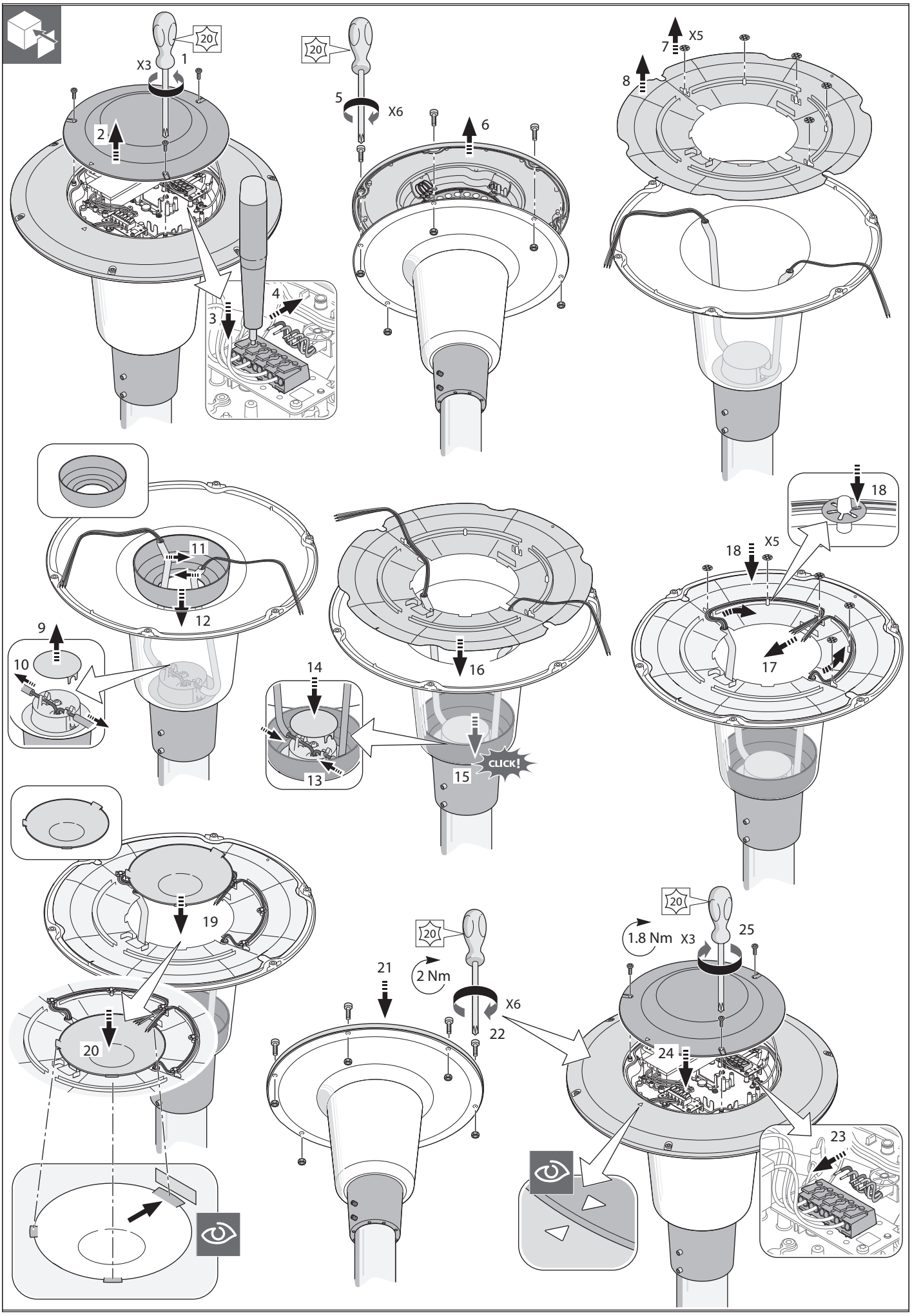
20
X3
1
2
3
4
20
5
X6
6
X5
7
8
11
12
9
10
14
13
16
15
CLICK!
18
18
X5
17
19
20
20
21
2 Nm
X6
22
20
1.8 Nm
X3
25
24
23

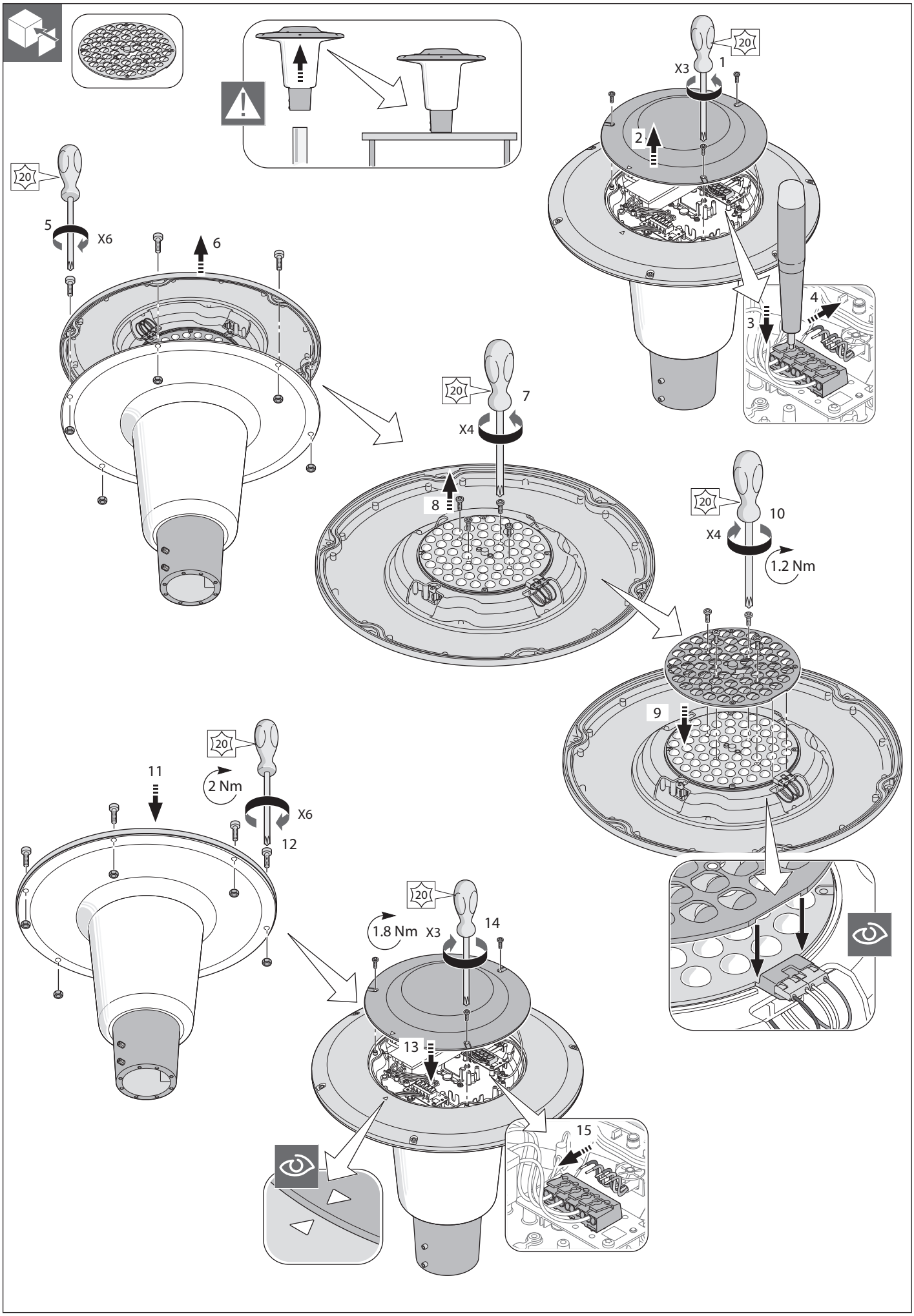
20
X3
1
2
3
4
20
5
X6
6
20
7
X4
8
20
10
X4
1.2 Nm
9
20
11
2 Nm
X6
12
20
1.8 Nm
X3
14
13
15

© 2016 Koninklijke Philips N.V.
All rights reserved. Reproduction in whole or in part is prohibited without the prior written consent of the copyright owner.

The information presented in this document does not form part of any quotation or contract, is believed to be accurate and reliable and may be changed without notice. No liability will be accepted by the publisher for any consequence of its use.
Publication thereof does not convey nor imply any license under patent - or other industrial or intellectual property rights.

Philips Lighting B.V.
The Netherlands