PowerBalance, surface mounted

SM461V LED40S/840 PSD W17L169

PowerBalance Surface-mounted, LED module, system flux 4000 lm, 840 neutral white, Power supply unit with DALI interface

When it comes to lighting an office space with LED luminaires, people are usually willing to invest in sustainability provided the investment pays back. At the same time, the system should comply with office lighting norms to ensure a comfortable working environment. PowerBalance is Philips' most energy-efficient office-norm-compliant LED luminaire. It more than halves energy costs compared to a T5 solution, and the light source has a longer lifetime. This results in significantly lower operational costs, ensuring a payback that meets the needs of the specification market. PowerBalance surface-mounted luminaires are easy to install on ceilings thanks to their intuitive mounting system. PowerBalance is also available in a recessed version.

Product data

General Information	
Lamp family code	LED40S [LED module, system flux 4000 lm]
Cap-Base	- [-]
Light source replaceable	No
Number of gear units	1 unit
Driver included	Yes
Remarks	*-Per Lighting Europe guidance paper "Evaluating performance of LED based luminaires - January 2018": statistically there is no relevant difference in lumen maintenance between B50 and for example B10. Therefore, the median useful life (B50) value also represents the B10 value.
Product family code	SM461V [PowerBalance Surface-mounted]
Lighting Technology	LED
Embedded control	-
CE mark	Yes
Warranty period	5 years
Flammability mark	For mounting on normally flammable surfaces

PowerBalance, surface mounted

ENEC mark	ENEC plus mark
Glow-wire test	Temperature 850 °C, duration 5 s
EU RoHS compliant	Yes

Light Technical

Luminous Flux	4,000 lm
Correlated Color Temperature (Nom)	4000 K
Luminous Efficacy (rated) (Nom)	133 lm/W
Color rendering index (CRI)	≥80
Number of light sources	1
Beam angle of light source	- degree(s)
Light source color	840 neutral white
Optic type	-
Luminaire light beam spread	120°
Unified glare rating CEN	19

Operating and Electrical

Input Voltage	220-240 V
Line Frequency	50 to 60 Hz
Inrush current	48 A
Inrush time	1 ms
Power Consumption	30 W
Power Factor (Fraction)	0.9
Connection	Push-in connector and pull relief
Cable	-
Number of products on MCB of 16 A type B	20

Temperature

Ambient temperature range	+10 to +40 °C

Controls and Dimming

Dimmable	Yes
Driver/power unit/transformer	Power supply unit with DALI interface
Control interface	DALI
Constant light output	No

Mechanical and Housing

Housing Material	Steel
Reflector material	Polycarbonate
Optic material	-
Optical cover material	Polycarbonate
Fixation material	-
Housing Color	White
Optical cover finish	Matte
Overall length	1,685 mm
Overall width	171 mm
Overall height	85 mm
Dimensions (Height x Width x Depth)	85 x 171 x 1685 mm

Approval and Application

Ingress protection code	IP40 [Wire-protected]
Mech. impact protection code	IK02 [0.2 J standard]
Protection class IEC	Safety class I

Initial Performance (IEC Compliant)

Luminous flux tolerance	+/-10%
Initial chromaticity	(0.38, 0.38) SDCM <3
Power consumption tolerance	+/-10%

Application Conditions

Performance ambient temperature Tq	25 °C
Maximum dim level	1%
Suitable for random switching	No

Product Data

Order product name	SM461V LED40S/840 PSD W17L169
Full product name	SM461V LED40S/840 PSD W17L169
Full product code	871829127603600
Order code	910504091203
Material Nr. (12NC)	910504091203
Numerator - Quantity Per Pack	1
EAN/UPC - Product/Case	8718291276036
Numerator - Packs per outer box	1
EAN/UPC - Case	8718291276036

PowerBalance, surface mounted

Dimensional drawing

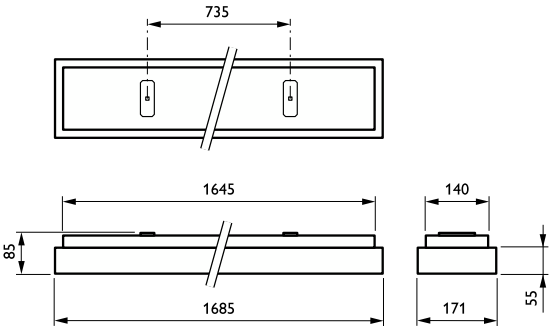

© 2023 Signify Holding All rights reserved. Signify does not give any representation or warranty as to the accuracy or completeness of the information included herein and shall not be liable for any action in reliance thereon. The information presented in this document is not intended as any commercial offer and does not form part of any quotation or contract, unless otherwise agreed by Signify. Philips and the Philips Shield Emblem are registered trademarks of Koninklijke Philips N.V.