Malaga 2 SGS103

SGS103 SON-T50W II TP SKD 42/60A

Malaga 2, SON-T, 50 W, Safety class II, Open T-POT, Universal for diameter 42 to 60 mm adjustable

Malaga SGS103/104 is a versatile road-lighting luminaire. It offers modern styling and quality lighting for safe and comfortable driving, and for area illumination, with low investment and maintenance costs. A special one-piece reflector helps to achieve improved light performance. The optical system has been designed to deliver good beam control and light output. Malaga SGS103/104 provides optimal illuminance and good uniformity when the mounting height approximately equals the road width and the mast spacing is approximately 3.5 times the road width. It is suitable for post-top and side-entry mounting.

Product data

General Information	
Lamp family code	SON-T [SON-T]
Cap-Base	E27 [E27]
Gear	CONV [Conventional]
Photocell	-
Product family code	SGS103 [Malaga 2]
CE mark	Yes
ENEC mark	ENEC mark

Light Technical	
Standard tilt angle posttop	0°
Standard tilt angle side entry	0°
Number of light sources	1
Optical cover type	Polycarbonate bowl/cover
Optic type outdoor	Open T-POT

Operating and Electrical	
Power Consumption	50 W

Mechanical and Housing	
Housing Color	Grey
Mounting device	Universal for diameter 42 to 60 mm adjustable

Approval and Application	
Ingress protection code	IP43/65 [Wire-protected, rain/spray-proof; dust penetration-protected, jet-proof]
Mech. impact protection code	IK08 [5 J vandal-protected]
Protection class IEC	Safety class II

Malaga 2 SGS103

Product Data	
Order product name	SGS103 SON-T50W II TP SKD 42/60A
Full product name	SGS103 SON-T50W II TP SKD 42/60A
Full product code	871155912417900
Order code	910925815012
Material Nr. (12NC)	910925815012

Numerator - Quantity Per Pack	1
EAN/UPC - Product/Case	8711559124179
Numerator - Packs per outer box	1
EAN/UPC - Case	8711559124179

Dimensional drawing

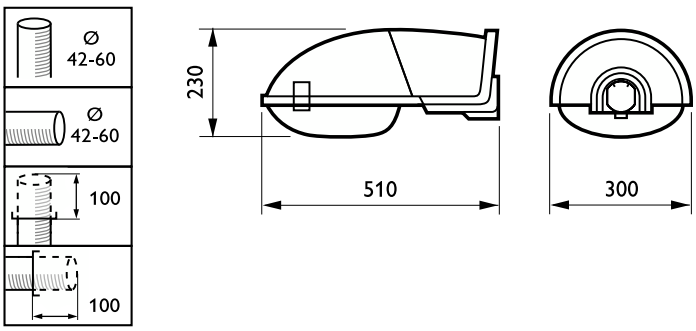

© 2023 Signify Holding All rights reserved. Signify does not give any representation or warranty as to the accuracy or completeness of the information included herein and shall not be liable for any action in reliance thereon. The information presented in this document is not intended as any commercial offer and does not form part of any quotation or contract, unless otherwise agreed by Signify. Philips and the Philips Shield Emblem are registered trademarks of Koninklijke Philips N.V.