ArenaVision MVF403 C

MVF403 C 1xMHN-LA1000W 220-240V A7

1, MASTER MHN-LA, 1000 W

Since it was first introduced in 1988, Philips ArenaVision has proven to be the best floodlighting system ever for sports lighting applications, most of which have to fulfill the highest specifications to enable television coverage of national and international events. ArenaVision is an integrated system that is supplied by one manufacturer as part of a complete system. Philips is the only manufacturer to provide all relevant technologies from lamp to gear to floodlight, so that everything works in synergy. With ArenaVision, the key disciplines of lamp, optic and gear design were brought together with a single mission: to create the best possible floodlight that will operate effectively for many years. ArenaVision MVF403 is ideal for indoor sports halls as well as many outdoor sports and other illumination uses. It comes with a variety of reflectors and lamps and offer a choice of optical systems and three levels of power output for every conceivable application.

Product data

General Information	
Lamp family code	MHN-LA [MASTER MHN-LA]
Gear	CONV [Conventional]
Value ladder	Specification

Light Technical	
Number of light sources	1
Optical cover type	-
Optic type outdoor	Beam category A7

Operating and Electrical	
Input Voltage	220 to 240 V
Line Frequency	50 Hz
Power Consumption	1,000 W

Approval and Application	
Ingress protection code	IP65 [Dust penetration-protected, jet-proof]

Product Data	
Order product name	MVF403 C 1xMHN-LA1000W 220-240V A7

ArenaVision MVF403 C

Full product name	MVF403 C 1xMHN-LA1000W 220-240V A7
Full product code	911401055280
Order code	911401055280
Material Nr. (12NC)	911401055280

Numerator - Quantity Per Pack	1
Numerator - Packs per outer box	1

Dimensional drawing

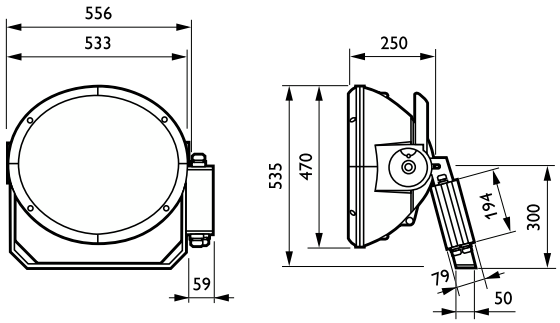

© 2023 Signify Holding All rights reserved. Signify does not give any representation or warranty as to the accuracy or completeness of the information included herein and shall not be liable for any action in reliance thereon. The information presented in this document is not intended as any commercial offer and does not form part of any quotation or contract, unless otherwise agreed by Signify. Philips and the Philips Shield Emblem are registered trademarks of Koninklijke Philips N.V.