CitySpirit Street LED

BDS480 LED37/NW PSU 220-240V DW2 MP1

CitySpirit Street LED, 3700 lm, 38 W, Neutral white, Distribution street pedestrian, Safety class I, Post-top for diameter 60 mm

Vibrant outdoor lighting has the power to revitalise a city's spirit, transforming it into an exciting, uplifting space where residents and visitors feel safe and at. home even after dark. Philips CitySpirit Street LED is luminaire designed to provide quality, environmentally friendly lighting. that seamlessly integrates into the urban landscape. Equipped with LED technology and consistent light output. This luminaire delivers efficient and excellent lighting to any city.

Product data

General Information	
Lamp family code	-
Light source replaceable	Yes
Number of gear units	-
Driver included	Yes
Light source engine type	LED
CE mark	-
Warranty period	3 years
Flammability mark	-
ENEC mark	-
EU RoHS compliant	No

Light Technical	
Upward light output ratio	0
Luminous Flux	3,700 lm
Standard tilt angle posttop	-
Standard tilt angle side entry	-
Correlated Color Temperature (Nom)	4000 K
Luminous Efficacy (rated) (Nom)	97.37 lm/W
Color rendering index (CRI)	70
Light source color	Neutral white
Optical cover type	Acrylate micro-lens optic clear
Luminaire light beam spread	-
Optic type outdoor	Distribution street pedestrian

Operating and Electrical	
Input Voltage	200 to 240 V
Line Frequency	50 to 60 Hz
Inrush current	7.1 A
Inrush time	61.2 ms
Power Consumption	38 W
Power Factor (Fraction)	0.95
Connection	Flying leads/wires
Cable	Cable 6.0 m without plug

CitySpirit Street LED

Number of products on MCB of 16 A type B	-

Temperature

Ambient temperature range	-40 to +35 °C

Controls and Dimming

Dimmable	Yes
Driver/power unit/transformer	Power supply unit (On/Off)
Control interface	-
Constant light output	No

Mechanical and Housing

Housing Material	Aluminum die cast
Reflector material	Glass
Optic material	Glass
Optical cover material	Polymethyl methacrylate
Fixation material	Stainless steel
Housing Color	Dark gray
Mounting device	Post-top for diameter 60 mm
Optical cover shape	Convex lens
Optical cover finish	Clear
Overall length	640 mm
Overall width	150 mm
Overall height	454 mm
Overall diameter	60 mm
Dimensions (Height x Width x Depth)	454 x 150 x 640 mm

Approval and Application

Ingress protection code	IP65 [Dust penetration-protected, jet-proof]
Mech. impact protection code	IK09 [10 J]
Surge Protection (Common/Differential)	4/2 kV
Protection class IEC	Safety class I

Initial Performance (IEC Compliant)

Luminous flux tolerance	+/-10%
Initial chromaticity	SDCM>5
Power consumption tolerance	+/-10%

Application Conditions

Maximum dim level	0% (digital)

Product Data

Order product name	BDS480 LED37/NW PSU 220-240V DW2 MP1
Full product name	BDS480 LED37/NW PSU 220-240V DW2 MP1
Full product code	911401617903
Order code	01617903
Material Nr. (12NC)	911401617903
Numerator - Quantity Per Pack	1
Numerator - Packs per outer box	1

Dimensional drawing

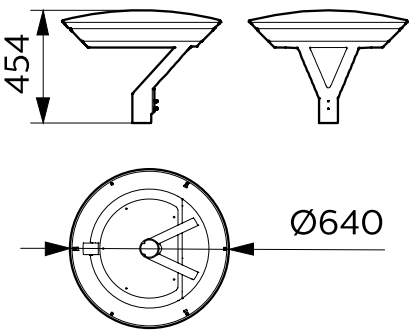

© 2023 Signify Holding All rights reserved. Signify does not give any representation or warranty as to the accuracy or completeness of the information included herein and shall not be liable for any action in reliance thereon. The information presented in this document is not intended as any commercial offer and does not form part of any quotation or contract, unless otherwise agreed by Signify. Philips and the Philips Shield Emblem are registered trademarks of Koninklijke Philips N.V.