Essential LEDspot MR16

Essential LED 2.6-20W 2700K MR16 24D

Essential LEDspots MR16 are compatible with most existing fixtures with a GU5.3 socket and are designed as a retrofit replacement for halogen spots. Essential LEDspots MR16 deliver significant energy savings and minimize initial investment.

Product data

General Information	
Cap-Base	GU5.3 [GU5.3]
Nominal lifetime	15,000 hour(s)
Switching Cycle	50,000
Lighting Technology	LED
EU RoHS compliant	Yes

Light Technical	
Color Code	827 [CCT of 2700K]
Beam Angle (Nom)	24 degree(s)
Luminous Flux	135 lm
Luminous Intensity (Nom)	460 cd
Color Designation	Warm White (WW)
Correlated Color Temperature (Nom)	2700 K
Luminous Efficacy (rated) (Nom)	51.92 lm/W
Color Consistency	<6
Color rendering index (CRI)	80
LLMF At End Of Nominal Lifetime (Nom)	70 %

Operating and Electrical	
Line Frequency	50 to 60 Hz
Input Frequency	50 to 60 Hz
Power Consumption	2.6 W
Lamp Current (Nom)	363 mA
Wattage Equivalent	20 W
Starting Time (Nom)	0.5 s
Warm-up time to 60% light	instant full light s
Power Factor (Fraction)	0.5
Voltage (Nom)	12 V

Controls and Dimming	
Dimmable	No

Mechanical and Housing	
Bulb Shape	MR16 [2inch/50mm]

Approval and Application	
Suitable For Accent Lighting	Yes
Energy Consumption kWh/1000 h	4 kWh

Product Data	
Order product name	Essential LED 2.6-20W 2700K MR16 24D

Essential LEDspot MR16

Full product name	Essential LED 2.6-20W 2700K MR16 24D
Full product code	871829166354600
Order code	929000232708
Material Nr. (12NC)	929000232708
Numerator - Quantity Per Pack	1

EAN/UPC - Product/Case	8718291663546
Numerator - Packs per outer box	20
EAN/UPC - Case	8718291663553

Dimensional drawing

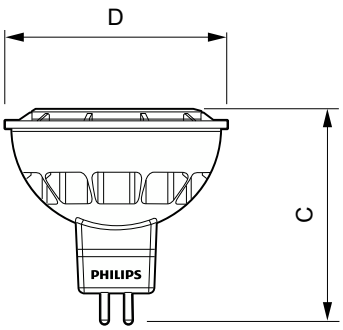

Product	D	C
Essential LED 2.6-20W 2700K MR16 24D	49.9 mm	47.6 mm

Photometric data

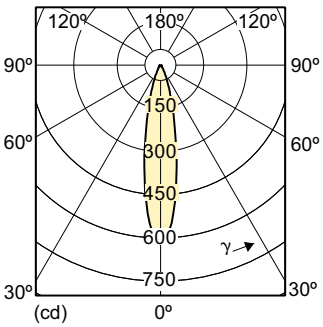

Light Distribution Diagram - Essential LED 2.6-20W 2700K MR16 24D

© 2023 Signify Holding All rights reserved. Signify does not give any representation or warranty as to the accuracy or completeness of the information included herein and shall not be liable for any action in reliance thereon. The information presented in this document is not intended as any commercial offer and does not form part of any quotation or contract, unless otherwise agreed by Signify. Philips and the Philips Shield Emblem are registered trademarks of Koninklijke Philips N.V.