MASTER LEDtube InstantFit HF

MASTER LEDtube HF 600mm 10.5W840 T8

The Philips MASTER LEDtube integrates a LED light source into a traditional fluorescent form factor. Its unique design creates a perfectly uniform visual appearance which cannot be distinguished from traditional fluorescent. This product is the ideal solution for up lamping in general lighting applications.

Warnings and Safety

- NOTES: The overall energy efficiency and light distribution of any installation that uses these lamps are determined by the design of the installation.

Product data

General Information	
Cap base	G13 [Medium Bi-Pin Fluorescent]
Nominal lifetime	50,000 h
Switching Cycle	50,000
Lighting Technology	LED
EU RoHS compliant	Yes

Light Technical	
Colour Code	840 [CCT of 4000K]
Beam angle (nom.)	160 degree(s)
Luminous Flux	1,050 lm
Correlated Colour Temperature	4000 K
Colour consistency	<6
Colour rendering index (CRI)	83
LLMF at end of nominal lifetime (nom.)	70 %

Operating and Electrical	
Line Frequency	20000-80000 Hz
Input frequency	20000-80000 Hz
Power Consumption	10.5 W
Lamp current (max.)	400 mA
Lamp current (min.)	200 mA
Starting time (nom.)	0.5 s
Warm-up time to 60% light	0.5 s
Power Factor (Fraction)	0.9
Voltage (nom.)	30-80 V

Temperature	
T-Case maximum (nom.)	40 °C

Controls and Dimming	
Dimmable	No

MASTER LEDtube InstantFit HF

Mechanical and Housing	
Product length	23-5/8 in

Approval and Application	
Energy-saving product	Yes
Suitable for accent lighting	No
Energy consumption kWh/1,000 hours	13 kWh

Product Data	
Order product name	MAS LEDtube HF 600mm 10.5W840 T8
Full product name	MASTER LEDtube HF 600mm 10.5W840 T8
Full EOC	871869655967300
Order code	55967300
Material no. (12 NC)	929001219602
SAP numerator – quantity per pack	1
EAN/UPC — Product/Case	8718696559673
Numerator – packs per outer box	10
EAN/UPC - Case	8718696559680

Dimensional drawing

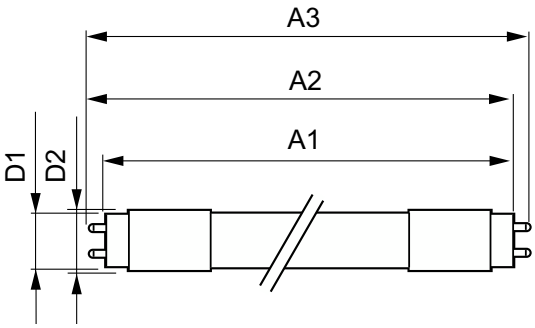

Product	D1	D2	A1	A2	A3
MAS LEDtube HF 600mm 10.5W840 T8	25.6 mm	27.8 mm	588.6 mm	595.7 mm	602.8 mm

Photometric data

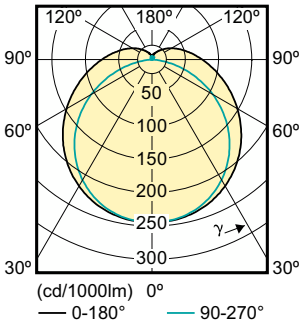

Light Distribution Diagram - MAS LEDtube HF 600mm 10.5W840 T8

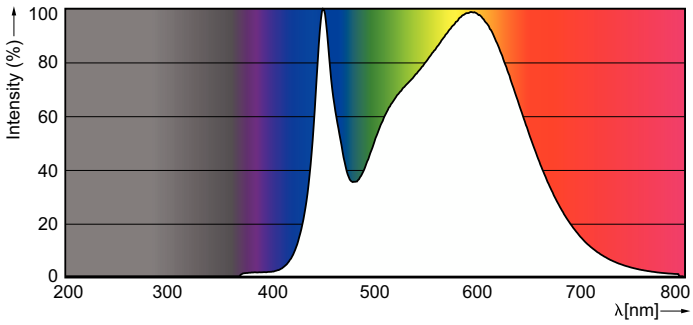

Spectral Power Distribution Colour - MAS LEDtube HF 600mm 10.5W840 T8

MASTER LEDtube InstantFit HF

Photometric data

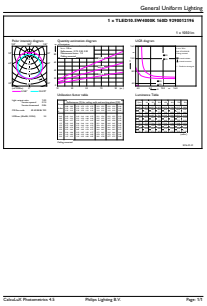

General uniform lighting - MAS LEDtube HF 600mm 10.5W840 T8

© 2023 Signify Holding All rights reserved. Signify does not give any representation or warranty as to the accuracy or completeness of the information included herein and shall not be liable for any action in reliance thereon. The information presented in this document is not intended as any commercial offer and does not form part of any quotation or contract, unless otherwise agreed by Signify. Philips and the Philips Shield Emblem are registered trademarks of Koninklijke Philips N.V.