1406-IF

Industrial Fluorescent

HP High Performance Industrial

2 or 3 Lamp T8, T5, or T5HO

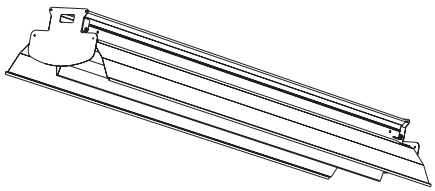

construction/finish

- Computer designed reflector provides efficient and uniform lighting of stacks or shelves.
- Narrow light distribution concentrates light under luminaire for high illumination levels.
- Excellent for shelf or stack lighting in tall or narrow aisles.
- Reflectors made of MIRO-4 specular aluminum material for high specularity with a 95% reflective surface.
- Multiple knockouts for convenient installation.
- Heavy duty industrial channel of code gauge die formed steel for added rigidity.
- Reflectors have center "V" for rigidity.
- Suitable for unit or row mounting.
- Housing is multi-stage phosphate treated for maximum corrosion resistance, and finish is baked white enamel.

electrical

- UL listed for damp locations. Units incorporating emergency ballasts UL listed for dry locations.
- Class P, HPF ballasts comply with Ⓔ Federal Ballast Law (Public Law 100-357,1988).
- Locking lampholders provide positive contact and secure retention of lamps.
- High ballast factor electronic ballast(s) available for added light output.
- Available Power/Connect option facilitates quick and easy electrical connections when mounting in continuous rows.

Specifier's Reference

Project
Type
Model No.
Comments

Green Choice: HP232-UNV-1/2-EBLHE

Family

HP – High Performance Industrial
THP – Tandem Version

No. of Lamps/Cross Section

(not included)
2
3

Lamp Type/Wattage

28 – 28WT5 (46")
32 – 32WT8 (48")
54HO – 54WT5HO (46")

Voltage

120
277
347
UNV – Universal voltage, 120-277 volt

Options

CM – Canadian Market
1/2 – One 2-lamp ballast (electronic or non-standard)
1/3 – One 3-lamp ballast (electronic or non-standard)
1/21 – 2-lamp & 1-lamp ballasts (electronic or non-standard)
1/4 – One 4-lamp ballast (electronic or non-standard)
1/42 – 4-lamp & 2-lamp ballasts (electronic or non-standard)
EB – Electronic ballast, <20% THD
EBH – High ballast factor electronic ballast (F32T8 only)
EB10I – Electronic ballast, instant start, <10% THD
EB10R – Electronic ballast, program rapid start, <10% THD
EBHE – F32T8 electronic ballast, high efficiency, std. ballast factor
EBLHE – F32T8 electronic ballast, high efficiency, low ballast factor
EBHHE – F32T8 electronic ballast, high efficiency, high ballast factor
E1 – DEB-1 emerg. ballast, 350-450 lumens, UL dry loc.
E7 – DEB-7 emerg. ballast, 600-700 lumens, UL dry loc.
E5 – DEB-5 emerg. ballast, 1100-1400 lumens, UL dry loc.
E5ST – DEB-5ST emerg. ballast w/self test, 1100-1400 lumens, UL dry loc.
GLR# – Fusing, fast blow (# = number of ballasts)

Power-Connect modular wiring, see sheet 1604-OA.

Accessories

5988W/5977W – Hydee hangers (4' models only)
CS-400 – Rigid stem canopy
CS-500 – Swivel stem canopy
CS Series Stems
FL-111 – Sliding hanger, conduit/stem/screw
FL-116 – Sliding hanger, chain suspension
FL-117 – Hook, chain
FL-118 – Sliding hanger, messenger cable
FL-119 – Hook, messenger cable
FL-123 – 5' chain (w/S-hooks) set
FL-3 – Channel coupling
N-3380/3381 – Universal joint aligner, octagonal box, 1/2" / 3/4" I.P.S.
N-3385 – Universal joint aligner, square box, 1/2" I.P.S.

Hg

Some luminaires use fluorescent or high intensity discharge (HID) lamps that contain small amounts of mercury. Such lamps are labeled, "Contain Mercury" and/or the symbol "HG". Lamps that contain mercury must be disposed of in accordance with local requirements. Information regarding lamp recycling and disposal can be found at www.lamprecycle.org

© 2013 Koninklijke Philips Electronics N.V. All rights reserved.
Specifications are subject to change without notice.
www.philips.com/luminaires

PHILIPS Day-Brite PHILIPS CFI

1406-IF

HP 4' or 8' 2 or 3 Lamp, T8, T5, or T5HO

dimensions

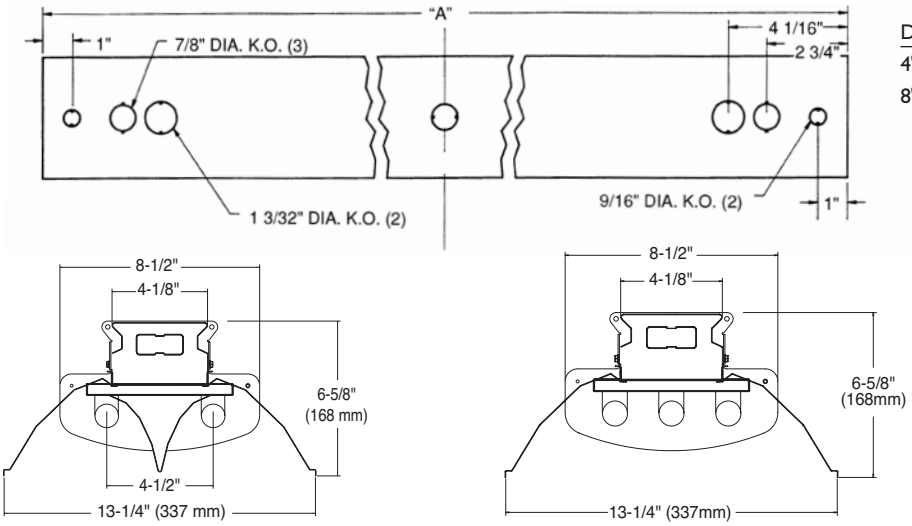

DIM A		
4' Channel	(1219 mm)	48"
8' Channel	(2438 mm)	96"

photometry

HP 4' 2 Lamp F32T8

Efficiency – 88.1% **LER – 80** **TER – 57**

Catalog No.	HP232-1/2-EB
Test No.	22158
S/MH	0.9
Lamp Type	F32T8
Lumens/Lamp	2850
Ballast Factor	1.2
Input Watts	75

Comparative yearly lighting energy cost per 1000 lumens – **$3.00** based on 3000 hrs. and $.08 pwr KWH.

The photometric results were obtained in the Philips Day-Brite laboratory which is NVLAP accredited by the National Institute of Standards and Technology.

Candlepower

Angle	End	45	Cross
0	2970	2970	2970
5	2939	2913	2905
15	2837	2642	2501
25	2631	2157	1787
35	2331	1509	1127
45	1952	924	602
55	1496	463	378
65	1005	266	163
75	506	57	3
85	95	12	1
95	4	9	2
105	4	7	2
115	4	7	2
125	4	5	3
135	3	4	3
145	6	6	5
155	6	7	6
165	8	8	7
175	8	8	7

Light Distribution

Degrees	Lumens	% Lamp	% Luminaire
0-30	2014	35.3	40.1
0-40	3025	53.1	60.3
0-60	4467	78.4	89.0
0-90	4984	87.4	99.3
0-180	5019	88.1	100.0

Average Luminance

Angle	End	45°	Cross
45	6692	3168	2064
55	6323	1957	1598
65	5765	1526	935
75	4740	534	28
85	2642	334	28

Coefficients of Utilization

EFFECTIVE FLOOR CAVITY REFLECTANCE 20 PER (pfc=0.20)

pcc	80			70			50	
pw	70	50	30	70	50	30	50	30
RCR								
0	105	105	105	102	102	102	96	96
1	97	93	91	94	92	89	88	85
2	90	83	79	88	82	78	79	76
3	83	76	69	81	73	68	71	67
4	77	68	61	76	67	60	65	59
5	71	61	55	69	60	55	58	54
6	67	56	50	65	56	48	54	47
7	63	52	45	60	51	45	50	44
8	58	47	40	56	46	40	46	40
9	55	44	38	54	44	38	42	36
10	52	40	34	51	40	34	40	34

HP 4' 3 Lamp F32T8

Efficiency – 93.7% **LER – 86** **TER – 59**

Catalog No.	HP332-1/3-EB
Test No.	239912
S/MH	1.2
Lamp Type	F32T8
Lumens/Lamp	2950
Ballast Factor	0.89
Input Watts	86

Comparative yearly lighting energy cost per 1000 lumens – **$2.79** based on 3000 hrs. and $.08 pwr KWH.

The photometric results were obtained in the Philips Day-Brite laboratory which is NVLAP accredited by the National Institute of Standards and Technology.

Candlepower

Angle	End	45	Cross
0	3458	3458	3458
5	3412	3482	3450
15	3299	3346	3368
25	3059	3161	3080
35	2709	2666	2270
45	2248	1845	1487
55	1724	1140	1258
65	1144	859	755
75	535	322	112
85	101	14	15
95	3	2	0
105	3	2	1
115	3	2	1
125	3	2	1
135	5	3	3
145	6	6	6
155	8	13	8
165	10	9	8
175	10	10	10

Light Distribution

Degrees	Lumens	% Lamp	% Luminaire
0-30	2699	30.5	32.6
0-40	4303	48.6	51.9
0-60	7021	79.3	84.7
0-90	8266	93.4	99.7
0-180	8289	93.7	100.0

Average Luminance

Angle	End	45°	Cross
45	7897	5423	4244
55	7228	3764	3999
65	6180	3352	2803
75	4243	1595	519
85	1597	99	96

Coefficients of Utilization

EFFECTIVE FLOOR CAVITY REFLECTANCE 20 PER (pfc=0.20)

pcc	80			70			50	
pw	70	50	30	70	50	30	50	30
RCR								
0	111	111	111	109	109	109	104	104
1	103	98	94	100	96	93	93	90
2	93	86	81	92	85	80	81	78
3	86	77	69	83	76	68	72	68
4	80	68	60	78	68	60	66	58
5	73	61	54	71	60	54	58	53
6	68	56	47	66	55	47	54	46
7	63	51	42	61	50	42	48	41
8	58	46	39	57	46	39	45	38
9	55	42	35	54	42	35	41	34
10	52	40	33	51	39	33	39	32

© 2013 Koninklijke Philips Electronics N.V. All rights reserved.
Specifications are subject to change without notice.
www.philips.com/luminaires

1406-IF 04/13

Philips Lighting Company
200 Franklin Square Drive
Somerset, NJ 08873
Phone: 855-486-2216

Philips Lighting Company
281 Hillmount Road
Markham ON, Canada L6C 2S3
Phone: 800-668-9008