READ AND UNDERSTAND THESE INSTRUCTIONS BEFORE INSTALLING FIXTURE

This fixture is intended for installation in accordance with the National Electrical Code and local regulations. To assure full compliance with local codes and regulations, check with your local electrical inspector before installation. To prevent electric shock, turn off electricity at fuse box before proceeding.

Retain these instructions for maintenance reference.

INSTRUCTION SHEET NO.

IS:C120

A1099

INSTALLATION PROCEDURE FOR: C4120, C4A120, C6120, C6A120, C6D120, C6DA120 -- RECESSED FRAME-IN-KIT

WARNING: (RISK OF FIRE) DO NOT INSTALL INSULATION WITHIN 3 INCHES OF FIXTURE SIDES OR WIRING COMPARTMENT, NOR ABOVE FIXTURE IN SUCH A MANNER SO AS TO ENTRAP HEAT.

WARNING: USE ONLY REFLECTOR TRIMS PROVIDED BY LIGHTOLIER. USE OF OTHER MANUFACTURES' REFLECTOR TRIMS MAY VOID THE UNDERWRITERS LABORATORIES LISTING AND COULD CONSTITUTE A FIRE HAZARD.

MODEL: C4120

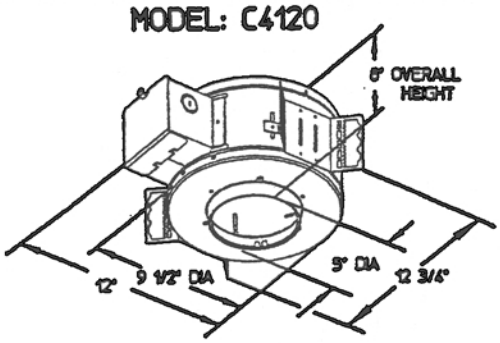

MODEL: C4A120

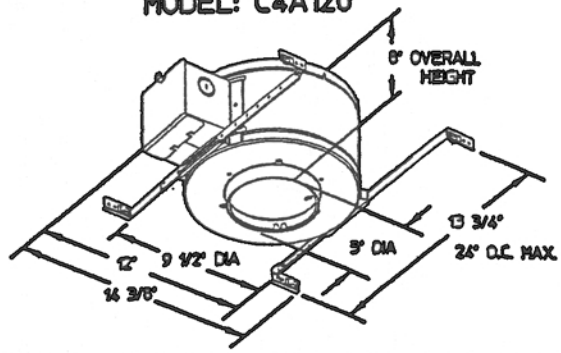

MODEL: C6120

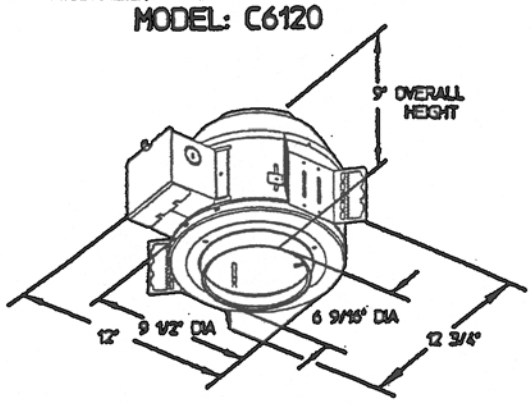

MODEL: C6A120

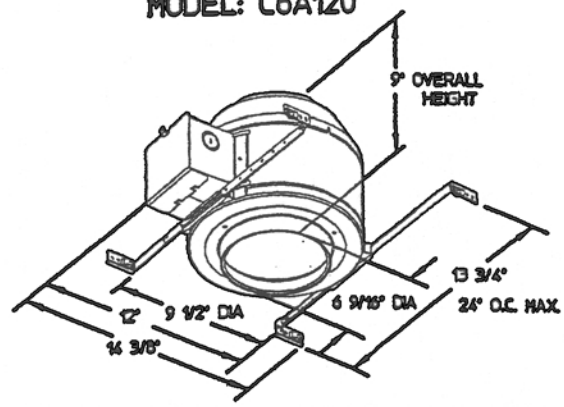

MODEL: C6D120

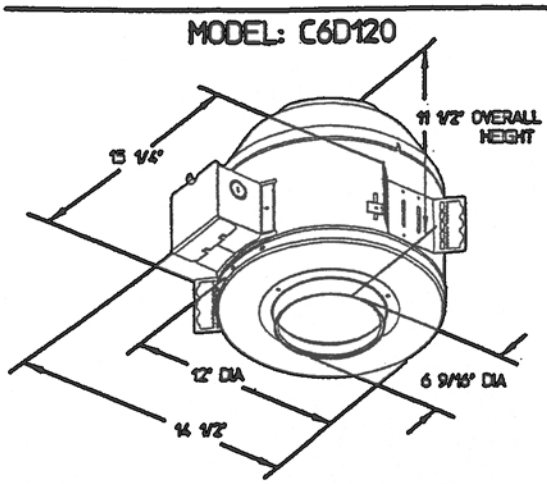

MODEL: C6DA120

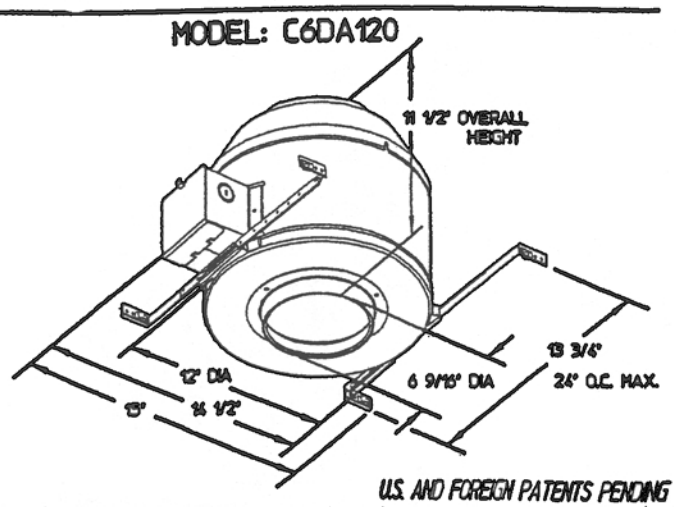

U.S. AND FOREIGN PATENTS PENDING

LIGHTOLIER®

LIGHTOLIER a GENLYTE THOMAS company.
631 Airport Road, Fall River, MA 02720