INSTALLATION INSTRUCTIONS

WALL MOUNT AVALUME LUMINAIRE AVA, AVV
(RECESSED J-BOX OR CONDUIT STUB OUT)

IMPORTANT: READ ALL INSTRUCTIONS BEFORE PERFORMING ANY WORK.

BE SURE ALL POWER IS OFF PRIOR TO INSTALLING LUMINAIRES

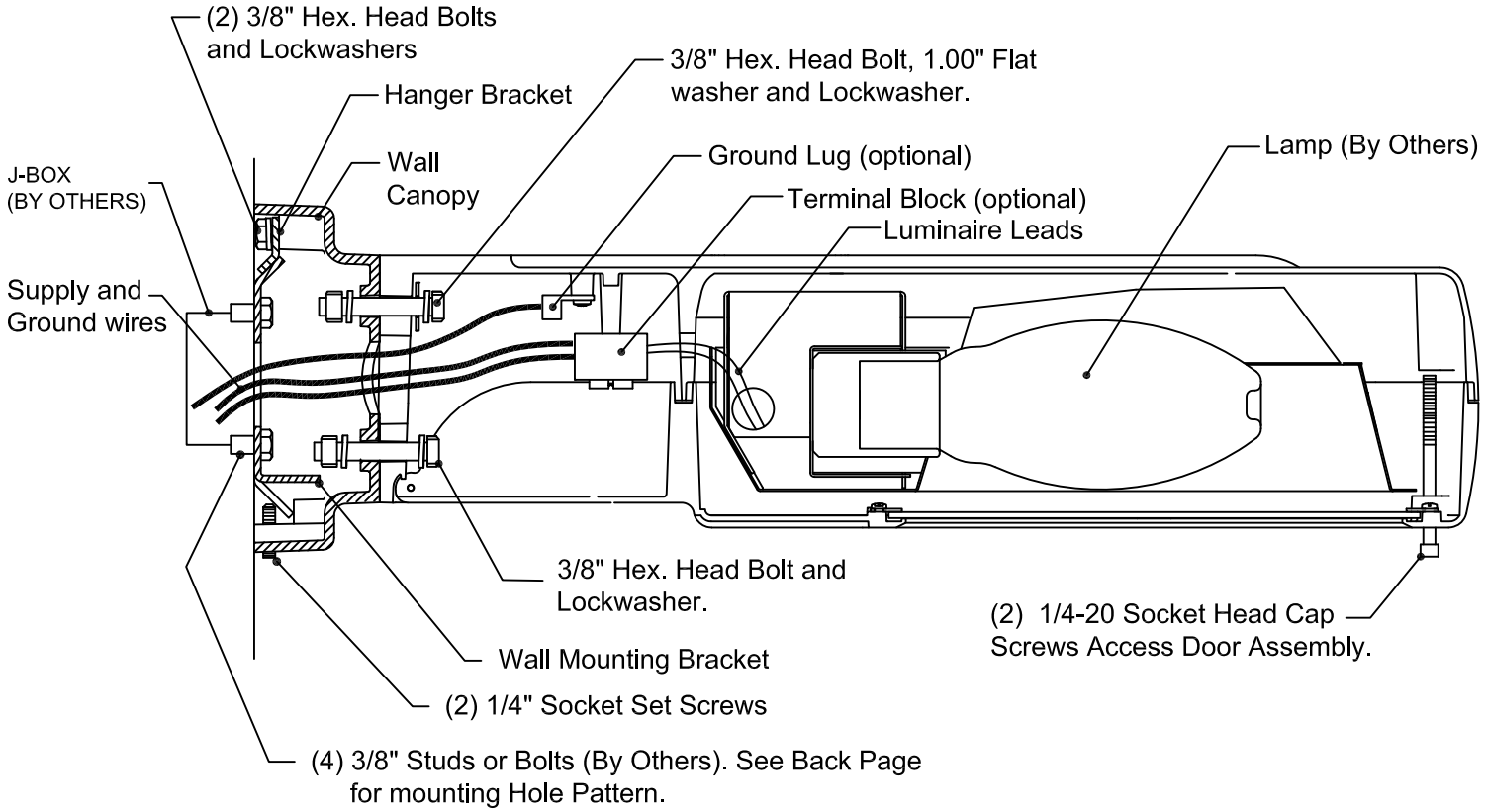

1. Place WALL MOUNTING BRACKET over splice box (or conduit stub out) and secure to wall with 3/8" studs or bolts (BY OTHERS). See mounting hole pattern for bolt location.
2. Pull SUPPLY AND GROUND WIRES so that they extend approximately 10" from WALL MOUNTING BRACKET.
3. Install HANGER BRACKET to WALL CANOPY with (2) 3/8" HEX. HEAD BOLTS and LOCKWASHERS.
4. Loosen (2) # 1/4–20 SOCKET HEAD CAP SCREWS using 3/16" allen wrench and open DOOR ASSEMBLY.
5. Secure WALL CANOPY to luminaire with (2) 3/8" HEX. HEAD BOLTS and LOCKWASHERS. Install the 1.00" FLAT WASHER only to the top bolt. Install LOCKWASHERS and NUTS to the end of the bolts. Tighten bolts to 18 ft–lbs.
6. Feed SUPPLY and GROUND wires through back of WALL CANOPY into LUMINAIRE. Engage HANGER BRACKET to the top angled flap of the WALL MOUNTING BRACKET and allow WALL CANOPY to rest against the wall. Tighten (2) 1/4" SOCKET SET SCREWS using 1/8" allen wrench.

PHILIPS

© 2016 Philips Lighting Holding B.V. All rights reserved.

INSTALLATION INSTRUCTIONS
WALL MOUNT AVALUME LUMINAIRE AVA, AVV
(RECESSED J-BOX OR CONDUIT STUB OUT)

7. Connect supply and ground wires to Luminaire Leads.
   Make wire connections per NEC or applicable local codes.
8. Install proper lamp(s) per luminaire markings.
9. Install photocontrol if used.
10. Close door and secure it being careful not to over tighten the bolts.

NOTE: WALL MOUNTING BRACKET IS SECURED TO WALL WITH 3/8" STUDS OR BOLTS (BY OTHERS). STRUCTUAL MEMBERS MUST BE PRESENT IN WALL TO ACCEPT BOLTS.

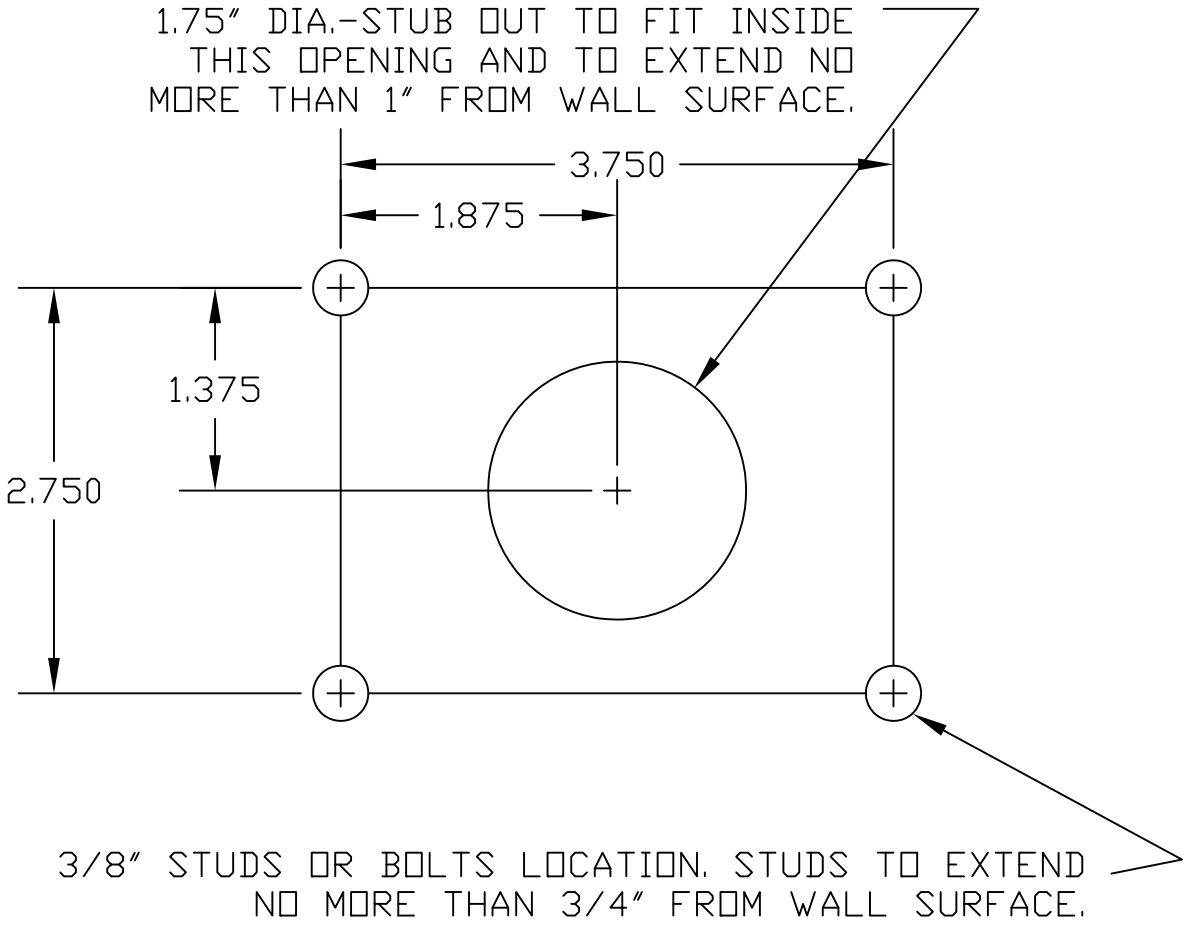

MOUNTING HOLE PATTERN

PHILIPS

© 2016 Philips Lighting Holding B.V. All rights reserved.

INSTALLATION INSTRUCTIONS

Gardco Demand Response (GDR)

SPECIFICATIONS:

-For use with Metal Halide (MH). Metal Halide Pulse Start (MHPS), and High Pressure Sodium (HPS) lamps.
-Operates only with Constant Wattage Autotransformer (CWA) type ballasts (compatible with all CWAs); contact Wattstopper/Legrand or ballast manufacturer for capacitor values appropriate for ballast.
-Dual (bi-level) capacitor can be supplied by Wattstopper/Legrand or fixture manufacturer.or ballast.
-Maximum load rating of 1000 watts for MH, HPS, or MHPS lamps.
-Lamp lighting levels can be reduced to 50% of full power.
-Includes 10 feet of outdoor rated low voltage wire to connect sensor.
-Relay rating is 15A at 250 VAC
-Operating temperature range is -41 to 135 degrees.
-Maximum current output of 15mA at 24 VDC
-Dimensions: 2.92" x 4.25" x 5.60 (74mm x 108mm x 142mm) H x W x D, < 2lbs.
-UL and CUL listed (rated 733a as a raintight device); five year warranty.

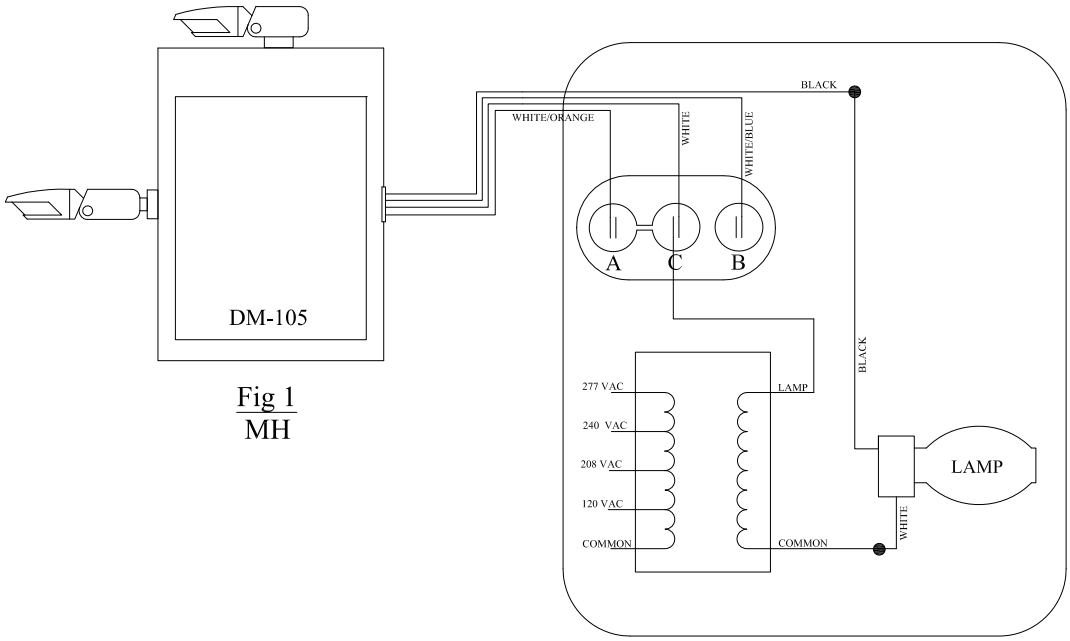

Fig 1
MH

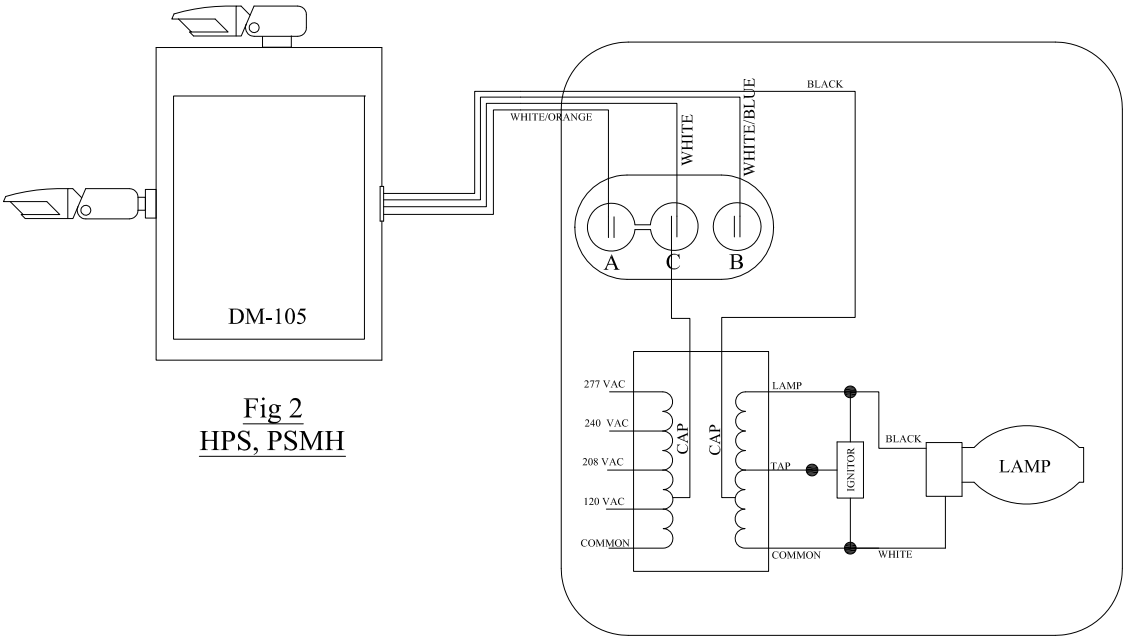

Fig 2
HPS, PSMH

PHILIPS

© 2016 Philips Lighting Holding B.V. All rights reserved.

INSTALLATION INSTRUCTIONS

Gardco Demand Response (GDR)

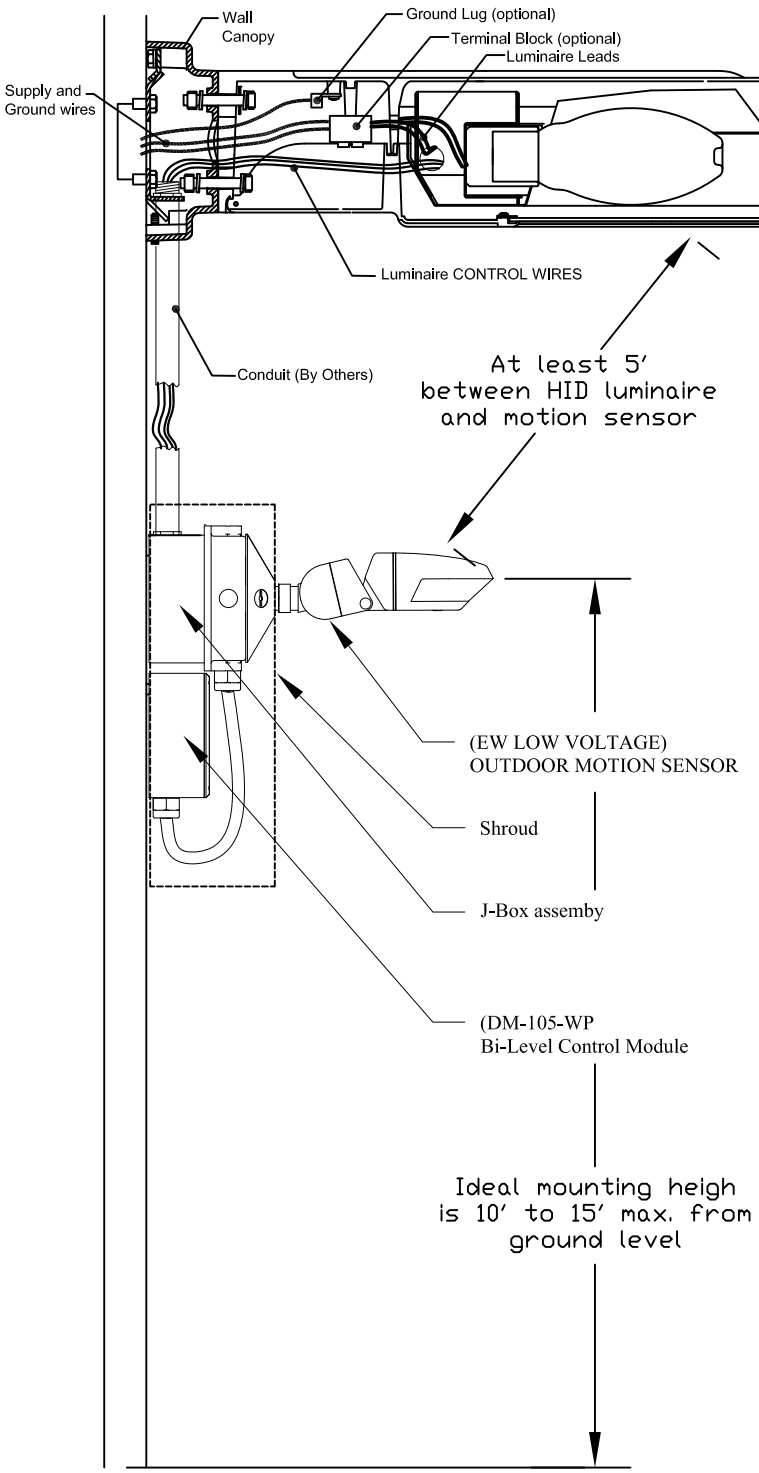

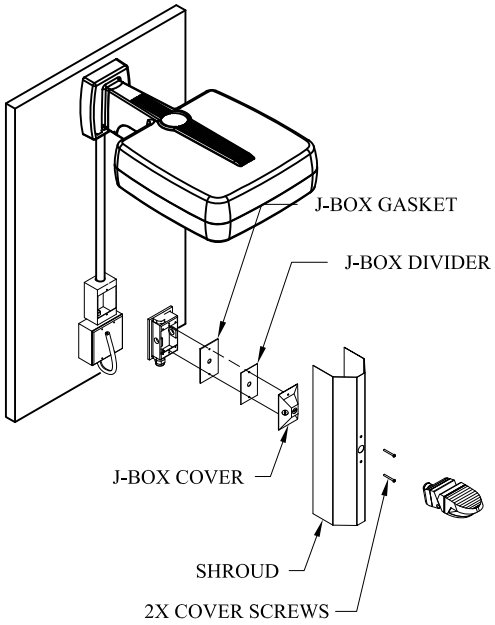

Installation for Gardco luminaire w/ Gardco Demand Response (GDR)

1. Install Gardco/Emco luminaire to wall by following the standard instructions.

Installation tools and materials not provided.

2. Bring Luminaire control wires through conduit. Run Luminaire control wires to the Bi-Level controll module. Seal Connections. Note: RTV sealant not provided.

3. Disassemble shroud assembly by using a phillips head driver to take out two J-Box cover screws. Remove & set aside sensor, shroud, cover, divider, and gasket.

4. Mount the J-Box assembly and BI-LEVEL control model on wall.

5. Pull luminaire control wires into middle J-Box.

6. Splice wires to color coded control box. If GDR is for a double head, wire all color coded wires together.

7. Mount J-Box internal cover plate so that control wires are seperated from sensor wires.

8. Reassemble housing as shown in instruction. If time or sensitivity needs to be adjusted, use PIR Adjustment located on the bottom of sensor.

PHILIPS

© 2016 Philips Lighting Holding B.V. All rights reserved.

INSTALLATION INSTRUCTIONS

Gardco Demand Response (GDR)

CONTROL WIRING

After the DM-100 is installed and the fixture has been remounted, low voltage control wire connections can be made to the terminal block, located on the side of the DM-100

Make connections before the fixture's power is restored. When all connections are made, continue to the Testing section.

DM-100 Terminal Block

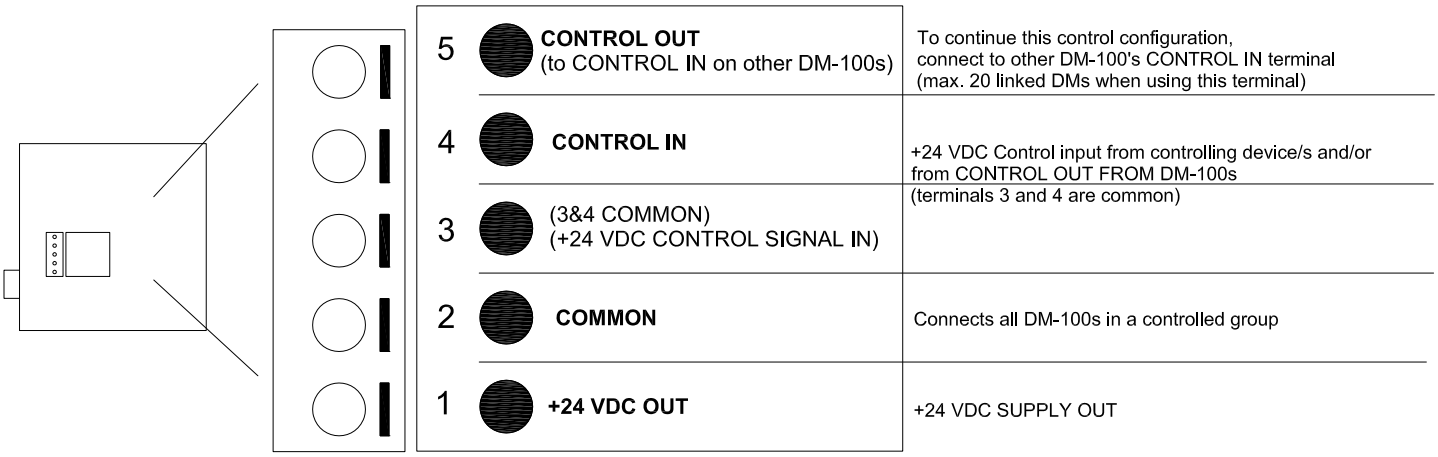

To insert or remove wires: Use a small flat-blade screwdriver to push in the plunger, insert wire, then release plunger.

If using stranded wire, make sure all the strands are inserted.

IMPORTANT: Verify that enough insulation is removed (3/8"-1/2") at the end of wires so that when inserted, a proper connection will be made.

Occupancy sensors: (typical connections)

1. Connect the sensor's +24VDC Input lead to the +24VDC OUT on the DM-100.
2. Connect the Common lead from the sensor to the COMMON on the DM-100.
3. Connect the Control Output lead from the sensor to a CONTROL IN on the DM-100.

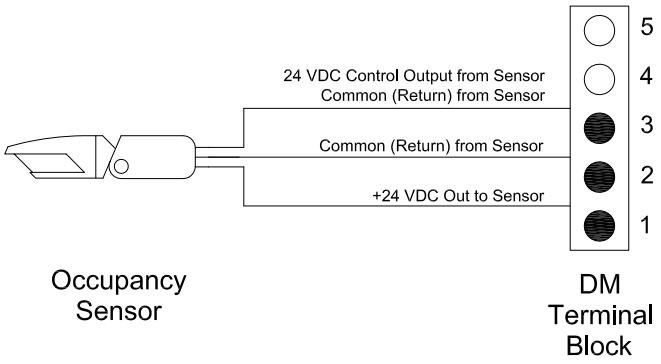

PHILIPS

© 2016 Philips Lighting Holding B.V. All rights reserved.

INSTALLATION INSTRUCTIONS

Gardco Demand Response (GDR)

Large Zone Control:
DM-100s can be connected to control more than 100 lighting fixtures. When one or more controlling devices are used in large zone applications, the following recommendations and wiring diagram should be followed:

-To avoid voltage drop issues:
- Use the heaviest gauge wire possible. We recommend 18-20AWG.
- Wire the DM-100s serially and sequentially to avoid long wire runs.
- If the controlling device is located a long distance away from the controlled zone, test the installation first with only a few DM-100s to ensure there are no problems.

Note: Contact Technical Support for assistance or clarification regarding these instructions. For recommendations on how to lay out a specifc project, request a custom wiring diagram from Technical Support.

Sample configuration:

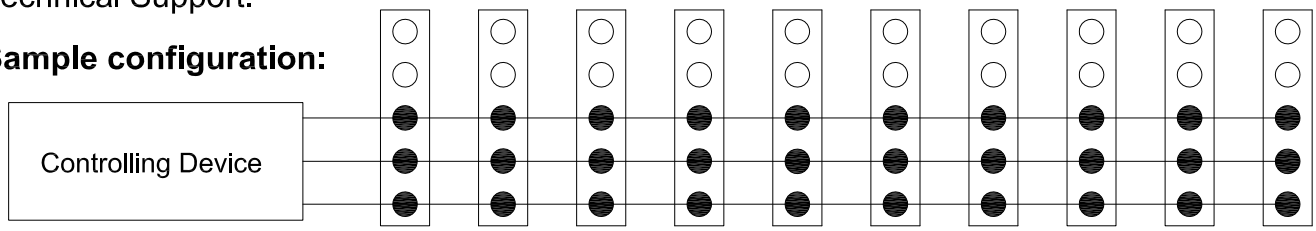

Small Control Groups:
- A controlling device can be extended to other DM-100s by linking the DM-100s together into a control group.
- A control group starts from the first DM-100 connected. All other DM-100s connected to this DM-100 (radially or in a series) are part of this group and controlled by the originating device(s).
- Groups can overlap. DM-100s can be part of more than one control group.
- When multiple controlling devices are used, only one signal is needed to turn the DM-100s to high.

Sample configuration:

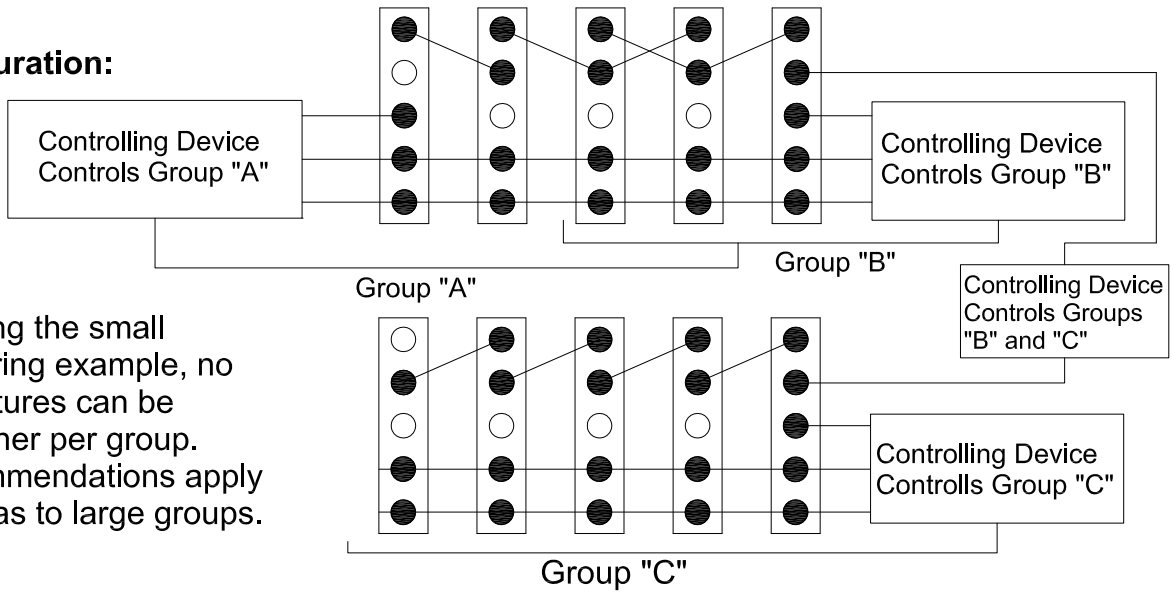

Note: When using the small control group wiring example, no more than 20 fixtures can be connected together per group. The same recommendations apply to small groups as to large groups.

PHILIPS

© 2016 Philips Lighting Holding B.V. All rights reserved.

Philips Lighting North America Corporation
200 Franklin Square Drive
Somerset, NJ 08873, USA

Philips Lighting Canada Ltd.
281 Hillmount Road,
Markham ON, Canada L6C 2S3