GreenSpace Accent Projector Gen1

ST320T LED27S/830 PSU MB SI

GREENSPACE ACCENT PROJECTOR, LED module 2700 lm, 830 warm white, Power supply unit (On/Off), Medium beam, Silver

Thanks to the GreenSpace Accent family, retailers and building operators can now make the switch from CDM to LED and enjoy the benefits of Philips PerfectAccent light quality as well as significant energy savings – all for a reasonable initial investment. GreenSpace Accent Projector's regular 3C adaptor and specific lumen packages make retrofit installation quick and easy. For fashion and food retailers, the GreenSpace Accent Projector is available with special light flavours and LED recipes to show the clothes and fresh food produce on offer in the very best light. Check out our Fashion and Food catalogue pages to find out more about CrispWhite, PremiumWhite, Fresh Food Meat and Fresh Food Champagne.

Product data

General Information	
Lamp family code	LED27 [LED module 2700 lm]
Cap-Base	- [-]
Light source replaceable	No
Number of gear units	1 unit
Driver included	Yes
Remarks	*-Per Lighting Europe guidance paper "Evaluating performance of LED based luminaires - January 2018": statistically there is no relevant difference in lumen maintenance between B50 and for example B10. Therefore, the median useful life (B50) value also represents the B10 value.
Service tag	Yes
Product family code	ST320T [GREENSPACE ACCENT PROJECTOR]
Lighting Technology	LED
CE mark	Yes
Warranty period	5 years
Flammability mark	For mounting on normally flammable surfaces
ENEC mark	ENEC mark
Glow-wire test	Temperature 650 °C, duration 5 s

GreenSpace Accent Projector Gen1

EU RoHS compliant	Yes

Light Technical

Luminous Flux	2,700 lm
Correlated Color Temperature (Nom)	3000 K
Luminous Efficacy (rated) (Nom)	114.8936170212766 lm/W
Color rendering index (CRI)	≥80
Number of light sources	1
Beam angle of light source	120 degree(s)
Light source color	830 warm white
Optic type	Medium beam
Optical cover type	Polymethyl methacrylate bowl/cover
Luminaire light beam spread	24°
Unified glare rating CEN	Not applicable

Operating and Electrical

Input Voltage	220-240 V
Line Frequency	50 to 60 Hz
Inrush current	18.6 A
Inrush time	0.240 ms
Power Consumption	23.5 W
Power Factor (Fraction)	0.9
Connection	-
Cable	-
Number of products on MCB of 16 A type B	32

Temperature

Ambient temperature range	+10 to +40 °C

Controls and Dimming

Dimmable	No
Driver/power unit/transformer	Power supply unit (On/Off)
Constant light output	No

Mechanical and Housing

Housing Material	Aluminum
Reflector material	Polycarbonate aluminum coated
Optic material	Polycarbonate
Optical cover material	Polymethyl methacrylate
Fixation material	Polyamide
Housing Color	Silver
Optical cover finish	Clear
Overall length	182 mm
Overall width	114 mm
Overall height	193 mm
Dimensions (Height x Width x Depth)	193 x 114 x 182 mm

Approval and Application

Ingress protection code	IP20 [Finger-protected]
Mech. impact protection code	IK02 [0.2 J standard]
Protection class IEC	Safety class II

Initial Performance (IEC Compliant)

Luminous flux tolerance	+/-10%
Initial chromaticity	(0.43, 0.40) SDCM<3
Power consumption tolerance	+/-10%

Over Time Performance (IEC Compliant)

Control gear failure rate at median useful life 50000 h	5 %
Lumen maintenance at median useful life* 50000 h	L80

Application Conditions

Performance ambient temperature Tq	25 °C
Suitable for random switching	Yes

Product Data

Order product name	ST320T LED27S/830 PSU MB SI
Full product name	ST320T LED27S/830 PSU MB SI
Full product code	871869916659500
Order code	16659500
Material Nr. (12NC)	910500459377
Numerator - Quantity Per Pack	1
EAN/UPC - Product/Case	8718699166595
Numerator - Packs per outer box	1
EAN/UPC - Case	8718699166595

GreenSpace Accent Projector Gen1

Dimensional drawing

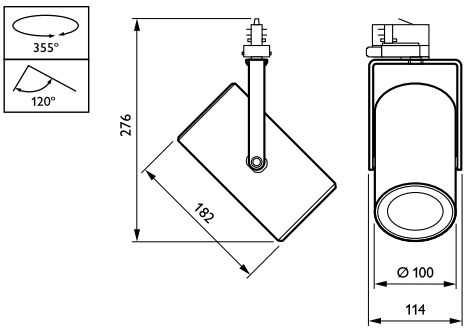

© 2023 Signify Holding All rights reserved. Signify does not give any representation or warranty as to the accuracy or completeness of the information included herein and shall not be liable for any action in reliance thereon. The information presented in this document is not intended as any commercial offer and does not form part of any quotation or contract, unless otherwise agreed by Signify. Philips and the Philips Shield Emblem are registered trademarks of Koninklijke Philips N.V.