Celino LED BCS680 C

BCS680 C LED24/840 PSU W7L120 MLO-PC

LED Module 2400 lm, 840 neutral white, Power supply unit (On/Off), Micro-lens optic in polycarbonate cover

Celino is a complete luminaire range that reflects the market trend towards miniaturization and architectural integration, while delivering a significant advance in optical performance. Celino features Philips' aluminum micro optic with 3D lamellae, which ensures optimum visual comfort and efficiency in compliance with the latest office-lighting norm (EN 12464-1). Made of natural anodized aluminum, the housing of Celino is a mere 71 mm wide and has die-cast-aluminum end caps. The design allows multiple luminaires to be connected in a line arrangement. Celino is available as a full range – suspended, surface-mounted, free-standing and wall-mounted, with a choice of TL5, TL5 Eco or LED light sources – for maximum freedom in application.

Product data

General Information	
Lamp family code	LED24 [LED Module 2400 lm]
Light source replaceable	No
Number of gear units	1 unit
Driver included	Yes
CE mark	-
Warranty period	3 years
Flammability mark	-
ENEC mark	-
Glow-wire test	Temperature 650 °C, duration 30 s
EU RoHS compliant	No

Light Technical	
Luminous Flux	1,800 lm
Correlated Color Temperature (Nom)	4000 K
Luminous Efficacy (rated) (Nom)	67 lm/W
Color rendering index (CRI)	>80
Beam angle of light source	120 degree(s)
Light source color	840 neutral white
Optic type	Wide beam
Optical cover type	Micro-lens optic in polycarbonate cover
Luminaire light beam spread	110° x 110°

Operating and Electrical	
Input Voltage	220-240 V

Celino LED BCS680 C

Line Frequency	50 to 60 Hz
Initial CLO power consumption	32 W
Average CLO power consumption	32 W
Inrush current	22 A
Inrush time	0.25 ms
Power Consumption	32 W
Power Factor (Fraction)	0.9
Connection	External connector
Cable	-
Number of products on MCB of 16 A type B	24

Temperature

Ambient temperature range	-20 to +40 °C

Controls and Dimming

Dimmable	No
Driver/power unit/transformer	Power supply unit (On/Off)
Constant light output	Yes

Mechanical and Housing

Housing Material	Aluminum extruded
Reflector material	Aluminum
Optic material	Polycarbonate
Optical cover material	Polycarbonate
Fixation material	Aluminum
Housing Color	Silver
Optical cover finish	Opal
Overall length	1,120 mm
Overall width	71 mm
Overall height	76 mm
Dimensions (Height x Width x Depth)	76 x 71 x 1120 mm

Approval and Application

Ingress protection code	IP20 [Finger-protected]
Mech. impact protection code	IK03 [0.3 J]
Protection class IEC	Safety class I

Initial Performance (IEC Compliant)

Luminous flux tolerance	+/-7.5%
Initial chromaticity	(0.38, 0.38) SDCM <4
Power consumption tolerance	+/-10%

Over Time Performance (IEC Compliant)

Driver failure rate at 5000 h	1 %
Median useful life L70B50	50,000 hour(s)
Median useful life L80B50	45,000 hour(s)
Median useful life L90B50	20,000 hour(s)

Application Conditions

Suitable for random switching	No

Product Data

Order product name	BCS680 C LED24/840 PSU W7L120 MLO-PC
Full product name	BCS680 C LED24/840 PSU W7L120 MLO-PC
Full product code	911401538901
Order code	911401538901
Material Nr. (12NC)	911401538901
Numerator - Quantity Per Pack	1
Numerator - Packs per outer box	1

Dimensional drawing

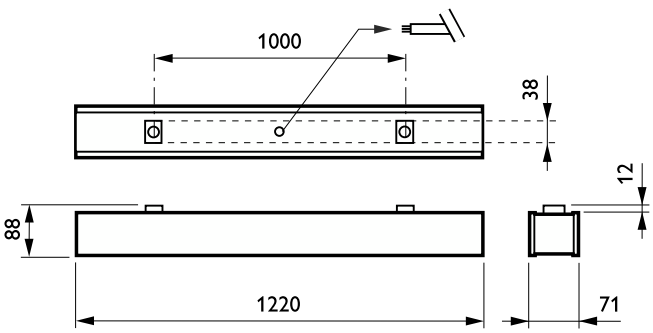

© 2023 Signify Holding All rights reserved. Signify does not give any representation or warranty as to the accuracy or completeness of the information included herein and shall not be liable for any action in reliance thereon. The information presented in this document is not intended as any commercial offer and does not form part of any quotation or contract, unless otherwise agreed by Signify. Philips and the Philips Shield Emblem are registered trademarks of Koninklijke Philips N.V.