Essential SmartBright LED Downlight

DN027B LED12/CW D175 RD

Essential SmartBright G2 LED Downlight is value for money product with high efficacy, good quality and reliability. It offers multiple configurations from 300lm to 2000lm output, to replace conventional downlight. It can be used for shopping mall, retail store, residential and office. It's an ideal product family to distribute in trade market.

Product data

General Information	
Light source replaceable	No
Lighting Technology	LED
Warranty period	1 years

Light Technical	
Luminous Flux	1,200 lm
Correlated Color Temperature (Nom)	6500 K
Color rendering index (CRI)	80
Light source color	3000/4000/6500
Luminaire light beam spread	110°

Operating and Electrical	
Line Frequency	50 or 60 Hz
Input Frequency	50 or 60 Hz
Power Consumption	15 W
Power Factor (Fraction)	0.7
Connection	Flying leads/wires

Temperature	
Ambient temperature range	-20 to +40 °C

Controls and Dimming	
Dimmable	No
Driver/power unit/transformer	Power supply unit (On/Off)

Mechanical and Housing	
Housing Material	Plastic
Reflector material	Polycarbonate
Optic material	Polycarbonate
Housing Color	White
Overall length	33 mm
Overall width	33 mm
Overall height	33 mm
Overall diameter	200 mm
Dimensions (Height x Width x Depth)	33 x 33 x 33 mm

Approval and Application	
Ingress protection code	IP20 [Finger-protected]

Essential SmartBright LED Downlight

Mech. impact protection code	IK02 [0.2 J standard]
Protection class IEC	Safety class II
Initial Performance (IEC Compliant)	
Initial chromaticity	SDCM<5
Power consumption tolerance	+/-10%
Product Data	
Order product name	DN027B LED12/CW D175 RD
Full product name	DN027B LED12/CW D175 RD

Full product code	911401812597
Order code	911401812597
Material Nr. (12NC)	911401812597
Numerator - Quantity Per Pack	1
EAN/UPC - Product/Case	8710163308913
Numerator - Packs per outer box	24
EAN/UPC - Case	8710163309798

Dimensional drawing

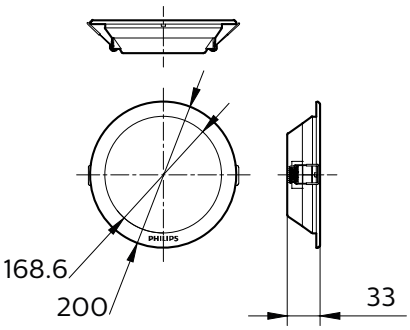

Photometric data

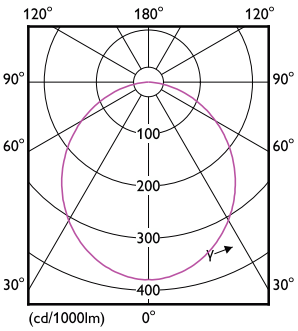

Light Distribution Diagram - DN027B LED12/CW D175 RD

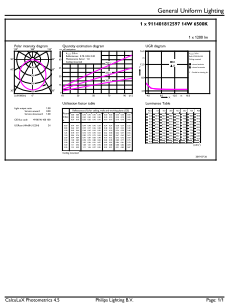

General uniform lighting - DN027B LED12/CW D175 RD

© 2023 Signify Holding All rights reserved. Signify does not give any representation or warranty as to the accuracy or completeness of the information included herein and shall not be liable for any action in reliance thereon. The information presented in this document is not intended as any commercial offer and does not form part of any quotation or contract, unless otherwise agreed by Signify. Philips and the Philips Shield Emblem are registered trademarks of Koninklijke Philips N.V.