Essential SmartBright LED Downlight

DN027C LED12/NW D175

Essential SmartBright G2 LED Downlight is value for money product with high efficacy, good quality and reliability. It offers multiple configurations from 300lm to 2000lm output, to replace conventional downlight. It can be used for shopping mall, retail store, residential and office. It's an ideal product family to distribute in trade market.

Product data

General Information	
Light source replaceable	No
Lighting Technology	LED

Light Technical	
Luminous Flux	1,200 lm
Correlated Color Temperature (Nom)	4000 K
Color rendering index (CRI)	80
Light source color	3000/4000/6500
Luminaire light beam spread	110°

Operating and Electrical	
Input Voltage	220 to 240 V
Line Frequency	50 or 60 Hz
Input Frequency	50 or 60 Hz
Power Consumption	15 W
Power Factor (Fraction)	0.9

Temperature	
Ambient temperature range	-20 to +40 °C

Mechanical and Housing	
Housing Material	Plastic
Reflector material	Polycarbonate
Housing Color	White
Overall length	175 mm
Overall width	225 mm
Overall height	40 mm
Overall diameter	175 mm
Dimensions (Height x Width x Depth)	40 x 225 x 175 mm

Approval and Application	
Ingress protection code	IP20 [Finger-protected]
Mech. impact protection code	IK02 [0.2 J standard]
Protection class IEC	Safety class II

Product Data	
Order product name	DN027C LED12/NW D175

Essential SmartBright LED Downlight

Full product name	DN027C LED12/NW D175
Full product code	911401816097
Order code	911401816097
Material Nr. (12NC)	911401816097
Numerator - Quantity Per Pack	1

EAN/UPC - Product/Case	8710163309262
Numerator - Packs per outer box	24
EAN/UPC - Case	8710163310145

Dimensional drawing

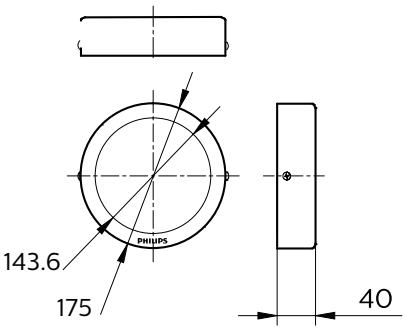

Photometric data

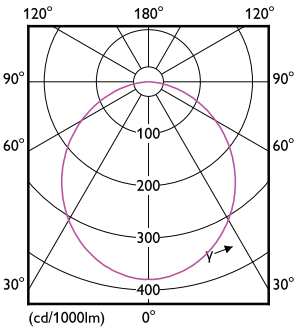

Light Distribution Diagram - DN027C LED12/NW D175

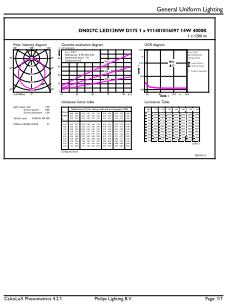

General uniform lighting - DN027C LED12/NW D175

© 2023 Signify Holding All rights reserved. Signify does not give any representation or warranty as to the accuracy or completeness of the information included herein and shall not be liable for any action in reliance thereon. The information presented in this document is not intended as any commercial offer and does not form part of any quotation or contract, unless otherwise agreed by Signify. Philips and the Philips Shield Emblem are registered trademarks of Koninklijke Philips N.V.