Dynalite User Interfaces

DTP170

Regardless of the level of integration and range of available functions, a control system requires an intuitive end-user interface, so that users can easily schedule and activate the various control functionalities. Philips Dynalite user interfaces come in a broad range of panels, touchscreens and wiring devices – with a rich variety of styles and finishes to match any project budget, level of interactivity, or décor requirements.

Product data

General Information	
Remarks	Please download the Lighting - Product Data Sheet for more information and ordering options
CE mark	CE mark
EU RoHS compliant	Yes

Temperature	
Ambient temperature range	0 to +45 °C

Product Data	
Order product name	DTP170
Full product name	DTP170
Full product code	871016351562500
Order code	913703075709
Material Nr. (12NC)	913703075709
Numerator - Quantity Per Pack	1
EAN/UPC - Product/Case	8710163515625
Numerator - Packs per outer box	1
EAN/UPC - Case	8710163515632

Dynalite User Interfaces

Dimensional drawing

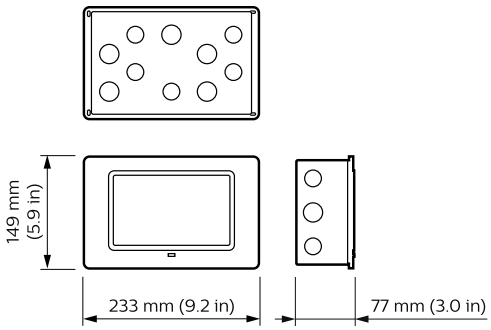

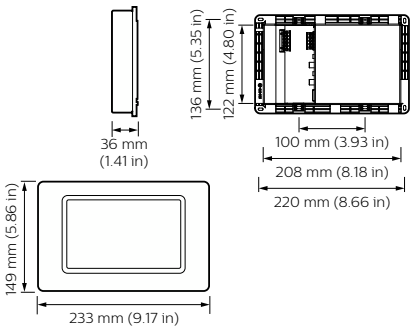

© 2023 Signify Holding All rights reserved. Signify does not give any representation or warranty as to the accuracy or completeness of the information included herein and shall not be liable for any action in reliance thereon. The information presented in this document is not intended as any commercial offer and does not form part of any quotation or contract, unless otherwise agreed by Signify. All trademarks are owned by Signify Holding or their respective owners.