# Dynalite Network Devices

## DTK622-232

To bring all the different devices together, Philips Dynalite supports a range of network devices that are useful in creating a problem-free installation.

### Product data

| General Information | |
|---|---|
| **Remarks** | Please download the Lighting - Product Data Sheet for more information and ordering options |
| **CE mark** | CE mark |
| **EU RoHS compliant** | Yes |

| Temperature | |
|---|---|
| **Ambient temperature range** | 0 to +40 °C |

| Product Data | |
|---|---|
| **Order product name** | DTK622-232 |
| **Full product name** | DTK622-232 |
| **Full product code** | 871016350802300 |
| **Order code** | 913703090109 |
| **Material Nr. (12NC)** | 913703090109 |
| **Numerator - Quantity Per Pack** | 1 |
| **EAN/UPC - Product/Case** | 8710163508023 |
| **Numerator - Packs per outer box** | 1 |
| **EAN/UPC - Case** | 8710163508030 |

# Dynalite Network Devices

## Dimensional drawing

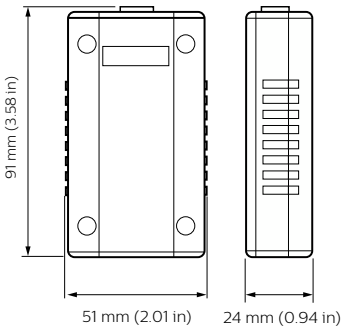


© 2023 Signify Holding All rights reserved. Signify does not give any representation or warranty as to the accuracy or completeness of the information included herein and shall not be liable for any action in reliance thereon. The information presented in this document is not intended as any commercial offer and does not form part of any quotation or contract, unless otherwise agreed by Signify. All trademarks are owned by Signify Holding or their respective owners.