CorePro Plastic LEDbulbs

CorePro LEDbulb ND 13-100W A60 E27 830

CorePro LEDbulbs are compatible with existing fixtures with an E27 or B22 holder and are designed for retrofit replacement of incandescent bulbs. They deliver huge energy savings and minimize maintenance cost.

Product data

General Information	
Cap-Base	E27
Nominal lifetime	15,000 hour(s)
Switching Cycle	50,000
Lighting Technology	LED
Flux measurement reference	Sphere
CE mark	Yes
EU RoHS compliant	Yes

Light Technical	
Color Code	830 [CCT of 3000K]
Beam Angle (Nom)	200 degree(s)
Luminous Flux	1,521 lm
Color Designation	White (WH)
Correlated Color Temperature (Nom)	3000 K
Luminous Efficacy (rated) (Nom)	117 lm/W
Color Consistency	<6
Color rendering index (CRI)	80
LLMF At End Of Nominal Lifetime (Nom)	70 %

Operating and Electrical	
Line Frequency	50 to 60 Hz
Input Frequency	50 to 60 Hz
Power Consumption	13 W
Lamp Current (Nom)	120 mA
Wattage Equivalent	100 W
Starting Time (Nom)	0.5 s
Warm-up time to 60% light	0.5 s
Power Factor (Fraction)	0.5
Voltage (Nom)	220-240 V

Temperature	
T-Case Maximum (Nom)	85 °C

Controls and Dimming	
Dimmable	No

Mechanical and Housing	
Bulb Finish	Frosted
Bulb Shape	A60

CorePro Plastic LEDbulbs

Approval and Application	
Energy Efficiency Class	E
Energy Consumption kWh/1000 h	13 kWh
EPREL Registration Number	397632
EyeComfort	Yes

Application Conditions	
can it be used in closed luminaires	No

Product Data	
Order product name	CorePro LEDbulb ND 13-100W A60 E27 830

Full product name	CorePro LEDbulb ND 13-100W A60 E27 830
Full product code	871869657767700
Order code	57767700
Material Nr. (12NC)	929001235002
Numerator - Quantity Per Pack	1
EAN/UPC - Product/Case	8718696577677
Numerator - Packs per outer box	10
EAN/UPC - Case	8718696577684

Dimensional drawing

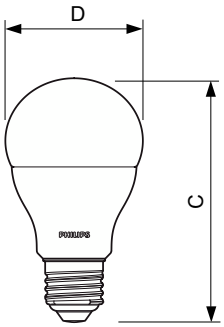

Product	D	C
CorePro LEDbulb ND 13-100W A60 E27 830	60 mm	110 mm

Photometric data

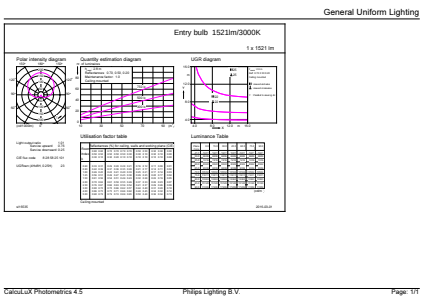

General uniform lighting - CorePro LEDbulb ND 13-100W A60 E27 830

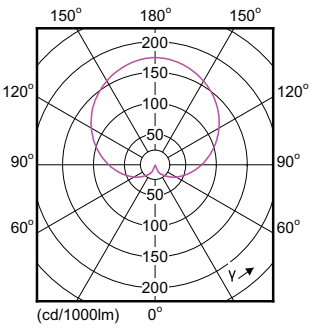

Light Distribution Diagram - CorePro LEDbulb ND 13-100W A60 E27 830

CorePro Plastic LEDbulbs

Photometric data

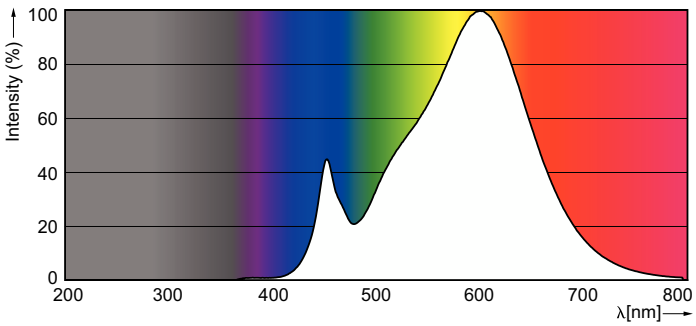

Spectral Power Distribution Colour - CorePro LEDbulb ND 13-100W A60 E27 830

Lifetime

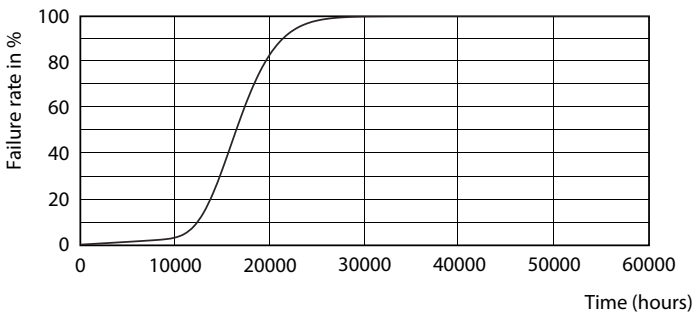

Life Expectancy Diagram - CorePro LEDbulb ND 13-100W A60 E27 830

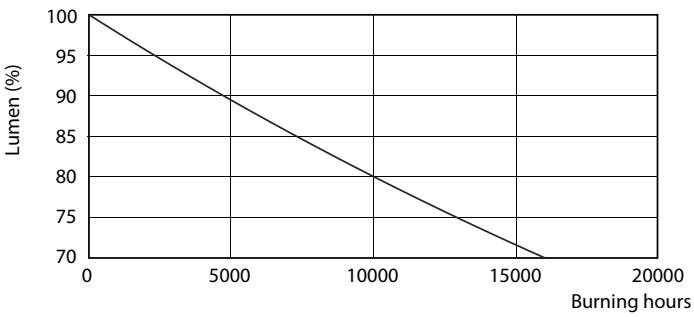

Lumen Maintenance Diagram - CorePro LEDbulb ND 13-100W A60 E27 830

© 2023 Signify Holding All rights reserved. Signify does not give any representation or warranty as to the accuracy or completeness of the information included herein and shall not be liable for any action in reliance thereon. The information presented in this document is not intended as any commercial offer and does not form part of any quotation or contract, unless otherwise agreed by Signify. Philips and the Philips Shield Emblem are registered trademarks of Koninklijke Philips N.V.